# Work Order ID 157754

*157754*

*Tuesday, March 07, 2017 2:08:41 PM*



**Item ID:** 646.4001 **Accept** *N900040100* **Setup Start** *NS1*

**Revision ID:** **Stop** *NS2*

**Item Name:** AS350 Cable Cutter System

**Start Date:** 3/14/2017 **Start Qty:** 1.00 *1* **Cust Item ID:**

**Required Date:** 3/21/2017 **Req'd Qty:** 1.00 *1* **Customer:**

**Reference:** SCHEDULED

MAR 0 7 2017

**Approvals:** **Process Plan:** _____ **Date:** _____ **Tooling:** _____ **Date:** _____ **Run Start** *NR1*

**QC:** _____ **Date:** _____ **SPC (Y/N):** _____ **Date:** _____ **Stop** *NR2*

| Draw Nbr | Revision Nbr |
|---|---|
| 646.4000 | C1 |

MAR 0 8 2017

DAS 6 9-89

| Sequence ID/ Work Center ID | Operation Description | Set Up/ Run Hours | Tool ID | Tool # | Plan Code | Accept Qty | Reject Qty | Reject Number | Insp. Stamp |
|---|---|---|---|---|---|---|---|---|---|
| 100 | Document Control | 0.00 | | | | | | | |
| *100* | DOCUMENT CONTROL | | | | | | | | |
| DC | **Memo** | 0.00 | | | | DAS 28 9-89 | APR 11 2017 | | |
| Doc.Control -USB or Paperwork | Photocopy bluefile & type labels per PPP 646.4001 | | | | | | | | |
| 110 | Pick Kit | 0.00 | | | | | | | |
| *110* | | | | | | | | | |
| Packaging | **Memo** | 0.00 | | | | | MAR 15 2017 | DAS 6 9-89 | DAS 27 9-89 |
| Packaging | | | | | | | | | |
| 120 | QC4- 100% Inspect kits for completeness | 0.00 | | | | | | | |
| *120* | | | | | | | | | |
| QC | **Memo** | 0.01 | | | | DAS 28 9-89 | APR 11 2017 | | |
| Quality Control | | | | | | | | | |

DQA: _____ Date: _____

# WORK ORDER NON-CONFORMANCE / UPDATE

QA Closed: Date: Work Order update only ☐

Work Order: _____

Part No. _____

NCR No.

**DISPOSITION**

| | |
|---|---|
| Rework | ☐ |
| Scrap | ☐ |
| Use-as-is | ☐ |
| Suspected Unapproved | ☐ |

**AGAINST DEPARTMENT/PROCESS**

| | | | | | | | |
|---|---|---|---|---|---|---|---|
| Skid-tube | ☐ | Cross tube | ☐ | Water Jet | ☐ | Engineering | ☐ |
| Machining | ☐ | Small Fab | ☐ | Prod. Eng. Coor. | ☐ | Quality | ☐ |
| Thermoforming | ☐ | Finishing | ☐ | Rec/Store/Packaging | ☐ | Other | ☐ |
| Large Fab | ☐ | Composite | ☐ | Supplier | ☐ | | ☐ |

| Date : | Step #: | QTY Effective : | MRB (QSI042) Approval |
|---|---|---|---|

| Description Work Order Deviation | Disposition | Completed By |
|---|---|---|
| | | Lead hand / Supervisor Approval Verification |
| | | QC / QA Coordinator Approval |

**Root Cause**

| | | | |
|---|---|---|---|
| Environment | ☐ | ☐ | No Re-verfication |
| Design | ☐ | ☐ | Operator |
| Doc/Data | ☐ | ☐ | Offset/Setup |
| Equip/Tooling | ☐ | ☐ | Supplier |
| Handling/Pre | ☐ | ☐ | Training |
| Material | ☐ | ☐ | Use for Testing |
| Internal Transport | ☐ | ☐ | Poor Information |
| Tribal Knowledge | ☐ | ☐ | Rushing |
| LOA | ☐ | ☐ | Product Improvement |
| Substation | ☐ | ☐ | Process Improvement |
| Past Expiry Date | ☐ | ☐ | Manufacturing Process |
| Misidentified | ☐ | ☐ | Past Due |

**FAULT CATEGORY**

| | | | |
|---|---|---|---|
| ☐ Pressure/Forced | ☐ Temperature/Cure | ☐ Power Loss/Surge | ☐ Positioned Wrong |
| ☐ Bending | ☐ Set-up | ☐ Folio/Program | ☐ Outside Dimensions |
| ☐ Centre Not Concentric | ☐ BOM/Route | ☐ Grain | ☐ Over/Under tolerance |
| ☐ Cracks | ☐ Broken/Damage/Defect | ☐ Weld | ☐ Part Incorrect |
| ☐ Crimp/Kink/Ripple/Wave | ☐ Inspection Incomplete/Unqualified | ☐ Wrong Stock Pulled | ☐ Part Lost/Missing |
| ☐ Cuffs | ☐ Contamination | ☐ Out of Sequence | ☐ Part Moved |
| ☐ Crushing | ☐ Countersink | ☐ Off-set | ☐ Drawing |
| ☐ Heat Treat | ☐ Cut Too Short | ☐ Mislabeled | ☐ Finish |
| ☐ Wave/Twist in Tube | ☐ Instructions Incomplete/Unclear | ☐ Fit/Function | ☐ Misread |
| ☐ Marks/Chatter | ☐ Drill Holes | ☐ Misaligned/off center | ☐ Turning Sequence |

☐ OTHER :

**Work Order ID 157754**

*Tuesday, March 07, 2017 2:08:41 PM*

*157754*

**Item ID:** 646.4001

**Revision ID:**

**Item Name:** AS350 Cable Cutter System

**Accept** *N900040100*

**Setup** **Start** *NS1*

**Stop** *NS2*

**Start Date:** 3/14/2017 **Start Qty:** 1.00 *1*

**Required Date:** 3/21/2017 **Req'd Qty:** 1.00 *1*

**Reference:** SCHEDULED

**Cust Item ID:**

**Customer:**

**Run** **Start** *NR1*

**Stop** *NR2*

**Approvals:** **Process Plan:** _____ **Date:** _____ **Tooling:** _____ **Date:** _____

**QC:** _____ **Date:** _____ **SPC (Y/N):** _____ **Date:** _____

| Sequence ID/ Work Center ID | Operation Description | Set Up/ Run Hours | Tool ID | Tool # | Plan Code | Accept Qty | Reject Qty | Reject Number | Insp. Stamp |
|---|---|---|---|---|---|---|---|---|---|
| 130 *130* Packaging Packaging | Packaging | 0.00 | | | | | DAS 28 9-89 | APR 11 2017 | |
| | **Memo** Identify and pack for shipping as per PPP 646.4001 Location: Fg 101 | 0.00 | | | | | | | |
| 140 *140* QC Quality Control | QC21- Final Inspection - Work Order Release | 0.00 | | | | | DAS 21 9-89 | APR 11 2017 | |
| | **Memo** | 0.02 | | | | | | | |

DAS 21 9-89 APR 11 2017

DQA: _____ Date: _____

# WORK ORDER NON-CONFORMANCE / UPDATE

DART AEROSPACE

QA Closed: Date: Work Order update only ☐

Work Order: _____

Part No. _____

NCR No.

**DISPOSITION**

Rework ☐
Scrap ☐
Use-as-is ☐
Suspected Unapproved ☐

**AGAINST DEPARTMENT/PROCESS**

| | | | | | | | |
|---|---|---|---|---|---|---|---|
| Skid-tube | ☐ | Cross tube | ☐ | Water Jet | ☐ | Engineering | ☐ |
| Machining | ☐ | Small Fab | ☐ | Prod. Eng. Coor. | ☐ | Quality | ☐ |
| Thermoforming | ☐ | Finishing | ☐ | Rec/Store/Packaging | ☐ | Other | ☐ |
| Large Fab | ☐ | Composite | ☐ | Supplier | ☐ | | ☐ |

| Date : | Step #: | QTY Effective : | MRB (QSI042) Approval |
|---|---|---|---|

| Description Work Order Deviation | Disposition | Completed By |
|---|---|---|
| | | Lead hand / Supervisor Approval Verification |
| | | QC / QA Coordinator Approval |

**Root Cause**

| | | | |
|---|---|---|---|
| Environment | ☐ | ☐ | No Re-verfication |
| Design | ☐ | ☐ | Operator |
| Doc/Data | ☐ | ☐ | Offset/Setup |
| Equip/Tooling | ☐ | ☐ | Supplier |
| Handling/Pre | ☐ | ☐ | Training |
| Material | ☐ | ☐ | Use for Testing |
| Internal Transport | ☐ | ☐ | Poor Information |
| Tribal Knowledge | ☐ | ☐ | Rushing |
| LOA | ☐ | ☐ | Product Improvement |
| Substation | ☐ | ☐ | Process Improvement |
| Past Expiry Date | ☐ | ☐ | Manufacturing Process |
| Misidentified | ☐ | ☐ | Past Due |

**FAULT CATEGORY**

| | | | | | | | |
|---|---|---|---|---|---|---|---|
| ☐ | Pressure/Forced | ☐ | Temperature/Cure | ☐ | Power Loss/Surge | ☐ | Positioned Wrong |
| ☐ | Bending | ☐ | Set-up | ☐ | Folio/Program | ☐ | Outside Dimensions |
| ☐ | Centre Not Concentric | ☐ | BOM/Route | ☐ | Grain | ☐ | Over/Under tolerance |
| ☐ | Cracks | ☐ | Broken/Damage/Defect | ☐ | Weld | ☐ | Part Incorrect |
| ☐ | Crimp/Kink/Ripple/Wave | ☐ | Inspection Incomplete/Unqualified | ☐ | Wrong Stock Pulled | ☐ | Part Lost/Missing |
| ☐ | Cuffs | ☐ | Contamination | ☐ | Out of Sequence | ☐ | Part Moved |
| ☐ | Crushing | ☐ | Countersink | ☐ | Off-set | ☐ | Drawing |
| ☐ | Heat Treat | ☐ | Cut Too Short | ☐ | Mislabeled | ☐ | Finish |
| ☐ | Wave/Twist in Tube | ☐ | Instructions Incomplete/Unclear | ☐ | Fit/Function | ☐ | Misread |
| ☐ | Marks/Chatter | ☐ | Drill Holes | ☐ | Misaligned/off center | ☐ | Turning Sequence |

☐ OTHER :

# Picklist Print

*Tuesday, March 07, 2017 2:08:45 PM*



19

**Work Order ID:** 157754

*157754*

**Parent Item:** 646.4001

*646 4001*

**Parent Item Name:** AS350 Cable Cutter System

**Start Date:** 3/14/2017 **Required Date:** 3/21/2017

**Start Qty:** 1.00 **Required Qty:** 1.00

**Comments:** IPP REV:A 12.10.23 NEW ISSUE DD VERF:JLM
IPP REV:B 15.01.08 AS PER DWG REV.B DD VERF:JLM IPP
REV:C 16.01.07 AS PER DWG REV.C DD VERF:JLM

| Component Item ID/ Item Name | Replacement Item ID | Mfg/ Purch | Bin Item | Primary Location | Last Location | Route Seq ID | Unit of Measure | Qty on Hand | Qty per Kit | Total Qty | Qty Issued | Date Issued | Status |
|---|---|---|---|---|---|---|---|---|---|---|---|---|---|
| 600.0129 | | Purchased | No | | | 100 | f | 144.0000 | 8 | 8 | DAS 6 9-89 | MAR 15 2017 | DAS 27 9-89 |
| *600 0129* | | | | | | | | | ** | | | | |
| VHB TAPE 75935A651 | | | | | | | | | | | | | |
| DAS 28 9-89 | | | | **Location** | | | **Loc Qty** | | **Loc Code** | | | | |
| | | | | CCK096 | | | 144 | | | | | | |
| | | | | | m135867 | | 144 | | | | | | |
| 600.0990 | | Purchased | No | | | 100 | Each | 22.0000 | 1 | 1 | | | DAS 27 9-89 |
| *600 0990* | | | | | | | | | ** | | | | |
| Magnabond 6398 Part A Size 112 ml | | | | | | | | | | | | | |
| 05/08/2017 DAS 28 9-89 | | | | **Location** | | | **Loc Qty** | | **Loc Code** | | | | |
| | | | | PKG | | | 22 | | | | | | |
| | | | | | M136586 | | 9 | | | | | | |
| | | | | | M136862 | | 12 | | | | | | |
| | | | | | M134249 | | 1 | | 1/1/2017 | | | | |
| 600.0991 | | Purchased | No | | | 100 | Each | 22.0000 | 1 | 1 | | | DAS 27 9-89 |
| *600 0991* | | | | | | | | | ** | | | | |
| Magnabond 6398 Part B Size 112 ml | | | | | | | | | | | | | |
| 05/08/2017 DAS 28 9-89 | | | | **Location** | | | **Loc Qty** | | **Loc Code** | | | | |
| | | | | PKG | | | 22 | | | | | | |
| | | | | | m136586 | | 10 | | | | | | |
| | | | | | m136862 | | 12 | | | | | | |

DQA: _____ Date: _____

# WORK ORDER NON-CONFORMANCE / UPDATE

DART AEROSPACE

QA Closed: Date: Work Order update only ☐

Work Order: _____

Part No. _____

NCR No.

**DISPOSITION**

| | |
|---|---|
| Rework | ☐ |
| Scrap | ☐ |
| Use-as-is | ☐ |
| Suspected Unapproved | ☐ |

**AGAINST DEPARTMENT/PROCESS**

| | | | | | | | |
|---|---|---|---|---|---|---|---|
| Skid-tube | ☐ | Cross tube | ☐ | Water Jet | ☐ | Engineering | ☐ |
| Machining | ☐ | Small Fab | ☐ | Prod. Eng. Coor. | ☐ | Quality | ☐ |
| Thermoforming | ☐ | Finishing | ☐ | Rec/Store/Packaging | ☐ | Other | ☐ |
| Large Fab | ☐ | Composite | ☐ | Supplier | ☐ | | |

Date :

Step #:

QTY Effective :

**MRB (QSI042) Approval**

**Description Work Order Deviation**

**Disposition**

**Completed By**

**Lead hand / Supervisor Approval Verification**

**QC / QA Coordinator Approval**

**Root Cause**

| | | | |
|---|---|---|---|
| Environment | ☐ | ☐ | No Re-verfication |
| Design | ☐ | ☐ | Operator |
| Doc/Data | ☐ | ☐ | Offset/Setup |
| Equip/Tooling | ☐ | ☐ | Supplier |
| Handling/Pre | ☐ | ☐ | Training |
| Material | ☐ | ☐ | Use for Testing |
| Internal Transport | ☐ | ☐ | Poor Information |
| Tribal Knowledge | ☐ | ☐ | Rushing |
| LOA | ☐ | ☐ | Product Improvement |
| Substation | ☐ | ☐ | Process Improvement |
| Past Expiry Date | ☐ | ☐ | Manufacturing Process |
| Misidentified | ☐ | ☐ | Past Due |

**FAULT CATEGORY**

| | | | |
|---|---|---|---|
| ☐ Pressure/Forced | ☐ Temperature/Cure | ☐ Power Loss/Surge | ☐ Positioned Wrong |
| ☐ Bending | ☐ Set-up | ☐ Folio/Program | ☐ Outside Dimensions |
| ☐ Centre Not Concentric | ☐ BOM/Route | ☐ Grain | ☐ Over/Under tolerance |
| ☐ Cracks | ☐ Broken/Damage/Defect | ☐ Weld | ☐ Part Incorrect |
| ☐ Crimp/Kink/Ripple/Wave | ☐ Inspection Incomplete/Unqualified | ☐ Wrong Stock Pulled | ☐ Part Lost/Missing |
| ☐ Cuffs | ☐ Contamination | ☐ Out of Sequence | ☐ Part Moved |
| ☐ Crushing | ☐ Countersink | ☐ Off-set | ☐ Drawing |
| ☐ Heat Treat | ☐ Cut Too Short | ☐ Mislabeled | ☐ Finish |
| ☐ Wave/Twist in Tube | ☐ Instructions Incomplete/Unclear | ☐ Fit/Function | ☐ Misread |
| ☐ Marks/Chatter | ☐ Drill Holes | ☐ Misaligned/off center | ☐ Turning Sequence |

☐ OTHER :

# Picklist Print

*Tuesday, March 07, 2017 2:08:45 PM*

**Work Order ID:** 157754 *157754*

**Parent Item:** 646.4001 *646 4001*

**Parent Item Name:** AS350 Cable Cutter System

**Start Date:** 3/14/2017 **Required Date:** 3/21/2017

**Start Qty:** 1.00 **Required Qty:** 1.00

| | | | | | | | | |
|---|---|---|---|---|---|---|---|---|
| 600.1012 | Purchased | No | | 100 | Each | 17.0000 | 1 | 1 |

*600 1012*

Sealant PR1425B2 (#654 sem)

DAS 28 9-89 9/30/2017

| Location | Loc Qty | Loc Code |
|---|---|---|
| cck017 | 17 | |
| m136554 | 3 | |
| m136838 | 14 | |

**

MAR 14 2017 DAS 6 9-89 DAS 27 9-89

| | | | | | | | | |
|---|---|---|---|---|---|---|---|---|
| 600.1013 | Purchased | No | | 100 | Each | 55.0000 | 5 | 5 |

*600 1013*

021200-3M TAPE PRIMER 94 PRIMER 24216

DAS 28 9-89

| Location | Loc Qty | Loc Code |
|---|---|---|
| CCK096 | 55 | |
| m136345 | 55 | |

**

DAS 27 9-89 MAR 14 2017 DAS 6 9-89

| | | | | | | | | |
|---|---|---|---|---|---|---|---|---|
| 646.2910 | Manufactured | No | | 100 | Each | 2.0000 | 1 | 1 |

*646 2910*

Deflector

DAS 28 9-89

| Location | Loc Qty | Loc Code |
|---|---|---|
| CCK050 | 2 | |
| 151647 | 2 | |

**

DAS 6 9-89 MAR 31 2017 DAS 27 9-89

| | | | | | | | | |
|---|---|---|---|---|---|---|---|---|
| 646.3001 | Manufactured | No | | 100 | Each | 4.0000 | 1 | 1 |

*646 3001*

Lower Cable Cutter Assembly

DAS 28 9-89

| Location | Loc Qty | Loc Code |
|---|---|---|
| ST018 | 4 | |
| 155642 | 4 | |

**

DAS 27 9-89 DAS 6 9-89 MAR 14 2017

DQA: _____ Date: _____

# WORK ORDER NON-CONFORMANCE / UPDATE

QA Closed: Date:

Work Order update only ☐

Work Order: _____

Part No. _____

NCR No.

**DISPOSITION**

Rework ☐
Scrap ☐
Use-as-is ☐
Suspected Unapproved ☐

**AGAINST DEPARTMENT/PROCESS**

| | | | |
|---|---|---|---|
| Skid-tube ☐ | Cross tube ☐ | Water Jet ☐ | Engineering ☐ |
| Machining ☐ | Small Fab ☐ | Prod. Eng. Coor. ☐ | Quality ☐ |
| Thermoforming ☐ | Finishing ☐ | Rec/Store/Packaging ☐ | Other ☐ |
| Large Fab ☐ | Composite ☐ | Supplier ☐ | |

Date :

Step #:

QTY Effective :

**MRB (QSI042) Approval**

**Description Work Order Deviation**

**Disposition**

**Completed By**

**Lead hand / Supervisor Approval Verification**

**QC / QA Coordinator Approval**

**Root Cause**

| | | | |
|---|---|---|---|
| Environment ☐ | | ☐ | No Re-verification |
| Design ☐ | | ☐ | Operator |
| Doc/Data ☐ | | ☐ | Offset/Setup |
| Equip/Tooling ☐ | | ☐ | Supplier |
| Handling/Pre ☐ | | ☐ | Training |
| Material ☐ | | ☐ | Use for Testing |
| Internal Transport ☐ | | ☐ | Poor Information |
| Tribal Knowledge ☐ | | ☐ | Rushing |
| LOA ☐ | | ☐ | Product Improvement |
| Substation ☐ | | ☐ | Process Improvement |
| Past Expiry Date ☐ | | ☐ | Manufacturing Process |
| Misidentified ☐ | | ☐ | Past Due |

**FAULT CATEGORY**

| | | | |
|---|---|---|---|
| ☐ Pressure/Forced | ☐ Temperature/Cure | ☐ Power Loss/Surge | ☐ Positioned Wrong |
| ☐ Bending | ☐ Set-up | ☐ Folio/Program | ☐ Outside Dimensions |
| ☐ Centre Not Concentric | ☐ BOM/Route | ☐ Grain | ☐ Over/Under tolerance |
| ☐ Cracks | ☐ Broken/Damage/Defect | ☐ Weld | ☐ Part Incorrect |
| ☐ Crimp/Kink/Ripple/Wave | ☐ Inspection Incomplete/Unqualified | ☐ Wrong Stock Pulled | ☐ Part Lost/Missing |
| ☐ Cuffs | ☐ Contamination | ☐ Out of Sequence | ☐ Part Moved |
| ☐ Crushing | ☐ Countersink | ☐ Off-set | ☐ Drawing |
| ☐ Heat Treat | ☐ Cut Too Short | ☐ Mislabeled | ☐ Finish |
| ☐ Wave/Twist in Tube | ☐ Instructions Incomplete/Unclear | ☐ Fit/Function | ☐ Misread |
| ☐ Marks/Chatter | ☐ Drill Holes | ☐ Misaligned/off center | ☐ Turning Sequence |

☐ OTHER :

**Work Order ID:** 157754

*157754*

**Parent Item:** 646.4001

*646 4001*

**Parent Item Name:** AS350 Cable Cutter System

**Start Date:** 3/14/2017 **Required Date:** 3/21/2017

**Start Qty:** 1.00 **Required Qty:** 1.00

646.3110 Manufactured No 100 Each 4.0000 1 1

*646 3110*

Channel

DAS 28 9-89

| Location | Loc Qty | Loc Code |
|---|---|---|
| cck020 | 4 | |
| 152235 | 4 | |

646.3210 Manufactured No 100 Each 4.0000 1 1

*646 3210*

Support

DAS 28 9-89

| Location | Loc Qty | Loc Code |
|---|---|---|
| cck020 | 4 | |
| 151669 | 4 | |

646.3301 Manufactured No 100 Each 4.0000 1 1

*646 3301*

Upper Cutter Assembly

DAS 28 9-89

| Location | Loc Qty | Loc Code |
|---|---|---|
| cck018 | 4 | |
| 155530 | 4 | 10/1/2018 |

646.3510 Manufactured No 100 Each 17.0000 1 1

*646 3510*

Strut

DAS 28 9-89

| Location | Loc Qty | Loc Code |
|---|---|---|
| cck104 | 7 | |
| 152366 | 7 | |
| CCK108A | 10 | |
| 156767 | 10 | |

MAR 14 2017 DAS 27 9-89 DAS 6 9-89

MAR 14 2017 DAS 6 9-89 DAS 27 9-89

MAR 14 2017 DAS 6 9-89 DAS 27 9-89

MAR 14 2017 DAS 6 9-89 DAS 27 9-89

DQA: _____ Date: _____

# WORK ORDER NON-CONFORMANCE / UPDATE

QA Closed: Date: Work Order update only ☐

Work Order: _____

Part No. _____

NCR No.

**DISPOSITION**

| | |
|---|---|
| Rework | ☐ |
| Scrap | ☐ |
| Use-as-is | ☐ |
| Suspected Unapproved | ☐ |

**AGAINST DEPARTMENT/PROCESS**

| | | | | | | | |
|---|---|---|---|---|---|---|---|
| Skid-tube | ☐ | Cross tube | ☐ | Water Jet | ☐ | Engineering | ☐ |
| Machining | ☐ | Small Fab | ☐ | Prod. Eng. Coor. | ☐ | Quality | ☐ |
| Thermoforming | ☐ | Finishing | ☐ | Rec/Store/Packaging | ☐ | Other | ☐ |
| Large Fab | ☐ | Composite | ☐ | Supplier | ☐ | | ☐ |

| Date : | Step #: | QTY Effective : | MRB (QSI042) Approval |
|---|---|---|---|
| | | | |

| Description Work Order Deviation | Disposition | Completed By |
|---|---|---|
| | | Lead hand / Supervisor Approval Verification |
| | | QC / QA Coordinator Approval |

**Root Cause**

| | | | |
|---|---|---|---|
| Environment | ☐ | ☐ | No Re-verfication |
| Design | ☐ | ☐ | Operator |
| Doc/Data | ☐ | ☐ | Offset/Setup |
| Equip/Tooling | ☐ | ☐ | Supplier |
| Handling/Pre | ☐ | ☐ | Training |
| Material | ☐ | ☐ | Use for Testing |
| Internal Transport | ☐ | ☐ | Poor Information |
| Tribal Knowledge | ☐ | ☐ | Rushing |
| LOA | ☐ | ☐ | Product Improvement |
| Substation | ☐ | ☐ | Process Improvement |
| Past Expiry Date | ☐ | ☐ | Manufacturing Process |
| Misidentified | ☐ | ☐ | Past Due |

**FAULT CATEGORY**

| | | | | | | | |
|---|---|---|---|---|---|---|---|
| ☐ | Pressure/Forced | ☐ | Temperature/Cure | ☐ | Power Loss/Surge | ☐ | Positioned Wrong |
| ☐ | Bending | ☐ | Set-up | ☐ | Folio/Program | ☐ | Outside Dimensions |
| ☐ | Centre Not Concentric | ☐ | BOM/Route | ☐ | Grain | ☐ | Over/Under tolerance |
| ☐ | Cracks | ☐ | Broken/Damage/Defect | ☐ | Weld | ☐ | Part Incorrect |
| ☐ | Crimp/Kink/Ripple/Wave | ☐ | Inspection Incomplete/Unqualified | ☐ | Wrong Stock Pulled | ☐ | Part Lost/Missing |
| ☐ | Cuffs | ☐ | Contamination | ☐ | Out of Sequence | ☐ | Part Moved |
| ☐ | Crushing | ☐ | Countersink | ☐ | Off-set | ☐ | Drawing |
| ☐ | Heat Treat | ☐ | Cut Too Short | ☐ | Mislabeled | ☐ | Finish |
| ☐ | Wave/Twist in Tube | ☐ | Instructions Incomplete/Unclear | ☐ | Fit/Function | ☐ | Misread |
| ☐ | Marks/Chatter | ☐ | Drill Holes | ☐ | Misaligned/off center | ☐ | Turning Sequence |

☐ OTHER :

**Work Order ID:** 157754 *157754*

**Parent Item:** 646.4001 *646 4001*

**Parent Item Name:** AS350 Cable Cutter System

**Start Date:** 3/14/2017 **Required Date:** 3/21/2017

**Start Qty:** 1.00 **Required Qty:** 1.00

| | | | | | | | | |
|---|---|---|---|---|---|---|---|---|
| 646.3511 | Manufactured | No | | 100 | Each | 11.0000 | 1 | 1 |

*646 3511*
Strut

DAS 28 9-89

DAS 6 9-89 MAR 1 4 2017 DAS 27 9-89

| Location | Loc Qty | Loc Code |
|---|---|---|
| cck104 | 5 | |
| 155269 | 5 | |
| CCK108A | 6 | |
| 156231 | 6 | |

| | | | | | | | | |
|---|---|---|---|---|---|---|---|---|
| 646.3610 | Manufactured | No | | 100 | Each | 5.0000 | 1 | 1 |

*646 3610*
Filler

DAS 28 9-89

DAS 6 9-89 MAR 1 4 2017 DAS 27 9-89

| Location | Loc Qty | Loc Code |
|---|---|---|
| cck104 | 5 | |
| 151687 | 5 | |

| | | | | | | | | |
|---|---|---|---|---|---|---|---|---|
| 646.3710 | Manufactured | No | | 100 | Each | 27.0000 | 1 | 1 |

*646 3710*
Doubler

DAS 28 9-89

DAS 6 9-89 MAR 1 4 2017 DAS 27 9-89

| Location | Loc Qty | Loc Code |
|---|---|---|
| CCK006 | 27 | |
| 152594 | 27 | |

| | | | | | | | | |
|---|---|---|---|---|---|---|---|---|
| 646.3711 | Manufactured | No | | 100 | Each | 6.0000 | 1 | 1 |

*646 3711*
Clip

DAS 28 9-89

DAS 6 9-89 MAR 1 4 2017 DAS 27 9-89

| Location | Loc Qty | Loc Code |
|---|---|---|
| cck104 | 6 | |
| 151670 | 6 | |

DQA: _____ Date: _____

# WORK ORDER NON-CONFORMANCE / UPDATE

QA Closed: Date: Work Order update only ☐

Work Order: _____

Part No. _____

NCR No.

**DISPOSITION**

| | |
|---|---|
| Rework | ☐ |
| Scrap | ☐ |
| Use-as-is | ☐ |
| Suspected Unapproved | ☐ |

**AGAINST DEPARTMENT/PROCESS**

| | | | | | | | |
|---|---|---|---|---|---|---|---|
| Skid-tube | ☐ | Cross tube | ☐ | Water Jet | ☐ | Engineering | ☐ |
| Machining | ☐ | Small Fab | ☐ | Prod. Eng. Coor. | ☐ | Quality | ☐ |
| Thermoforming | ☐ | Finishing | ☐ | Rec/Store/Packaging | ☐ | Other | ☐ |
| Large Fab | ☐ | Composite | ☐ | Supplier | ☐ | | |

Date :

Step #:

QTY Effective :

**MRB (QSI042) Approval**

**Description Work Order Deviation**

**Disposition**

**Completed By**

**Lead hand / Supervisor Approval Verification**

**QC / QA Coordinator Approval**

**Root Cause**

| | | | |
|---|---|---|---|
| Environment | ☐ | ☐ | No Re-verfication |
| Design | ☐ | ☐ | Operator |
| Doc/Data | ☐ | ☐ | Offset/Setup |
| Equip/Tooling | ☐ | ☐ | Supplier |
| Handling/Pre | ☐ | ☐ | Training |
| Material | ☐ | ☐ | Use for Testing |
| Internal Transport | ☐ | ☐ | Poor Information |
| Tribal Knowledge | ☐ | ☐ | Rushing |
| LOA | ☐ | ☐ | Product Improvement |
| Substation | ☐ | ☐ | Process Improvement |
| Past Expiry Date | ☐ | ☐ | Manufacturing Process |
| Misidentified | ☐ | ☐ | Past Due |

**FAULT CATEGORY**

| | | | |
|---|---|---|---|
| ☐ Pressure/Forced | ☐ Temperature/Cure | ☐ Power Loss/Surge | ☐ Positioned Wrong |
| ☐ Bending | ☐ Set-up | ☐ Folio/Program | ☐ Outside Dimensions |
| ☐ Centre Not Concentric | ☐ BOM/Route | ☐ Grain | ☐ Over/Under tolerance |
| ☐ Cracks | ☐ Broken/Damage/Defect | ☐ Weld | ☐ Part Incorrect |
| ☐ Crimp/Kink/Ripple/Wave | ☐ Inspection Incomplete/Unqualified | ☐ Wrong Stock Pulled | ☐ Part Lost/Missing |
| ☐ Cuffs | ☐ Contamination | ☐ Out of Sequence | ☐ Part Moved |
| ☐ Crushing | ☐ Countersink | ☐ Off-set | ☐ Drawing |
| ☐ Heat Treat | ☐ Cut Too Short | ☐ Mislabeled | ☐ Finish |
| ☐ Wave/Twist in Tube | ☐ Instructions Incomplete/Unclear | ☐ Fit/Function | ☐ Misread |
| ☐ Marks/Chatter | ☐ Drill Holes | ☐ Misaligned/off center | ☐ Turning Sequence |

☐ OTHER :

# Picklist Print

*Tuesday, March 07, 2017 2:08:46 PM*

**Work Order ID:** 157754 *157754*

**Parent Item:** 646.4001 *646 4001*

**Parent Item Name:** AS350 Cable Cutter System

**Start Date:** 3/14/2017 **Required Date:** 3/21/2017

**Start Qty:** 1.00 **Required Qty:** 1.00

| | | | | | | | | | |
|---|---|---|---|---|---|---|---|---|---|
| 646.3712 | Manufactured | No | | 100 | Each | 8.0000 | 1 | 1 | |
| *646 3712* | | | | | | | ** | MAR 1 4 2017 | DAS 6 9-89 DAS 27 9-89 |
| Clip | | | | | | | | | |
| DAS 28 9-89 | | | | | | | | | |

| Location | Loc Qty | Loc Code |
|---|---|---|
| cck104 | 8 | |
| 151018 | 2 | |
| 155309 | 6 | |

| | | | | | | | | | |
|---|---|---|---|---|---|---|---|---|---|
| 646.3713 | Manufactured | No | | 100 | Each | 8.0000 | 1 | 1 | |
| *646 3713* | | | | | | | ** | MAR 1 4 2017 | DAS 6 9-89 DAS 27 9-89 |
| Gusset | | | | | | | | | |
| DAS 28 9-89 | | | | | | | | | |

| Location | Loc Qty | Loc Code |
|---|---|---|
| cck105 | 8 | |
| 151646 | 8 | |

| | | | | | | | | | |
|---|---|---|---|---|---|---|---|---|---|
| 646.3714 | Manufactured | No | | 100 | Each | 8.0000 | 1 | 1 | |
| *646 3714* | | | | | | | ** | MAR 1 4 2017 | DAS 6 9-89 DAS 27 9-89 |
| Gusset | | | | | | | | | |
| DAS 28 9-89 | | | | | | | | | |

| Location | Loc Qty | Loc Code |
|---|---|---|
| cck105 | 8 | |
| 151643 | 8 | |

| | | | | | | | | | |
|---|---|---|---|---|---|---|---|---|---|
| 646.3715 | Manufactured | No | | 100 | Each | 4.0000 | 2 | 2 | |
| *646 3715* | | | | | | | ** | MAR 1 4 2017 | DAS 6 9-89 DAS 27 9-89 |
| Strut Doubler | | | | | | | | | |
| DAS 28 9-89 | | | | | | | | | |

| Location | Loc Qty | Loc Code |
|---|---|---|
| cck105 | 4 | |
| 155288 | 4 | |

156833

DQA: _____ Date: _____

# WORK ORDER NON-CONFORMANCE / UPDATE

DART AEROSPACE

QA Closed: Date: Work Order update only ☐

Work Order: _____

Part No. _____

NCR No.

**DISPOSITION**

| | |
|---|---|
| Rework | ☐ |
| Scrap | ☐ |
| Use-as-is | ☐ |
| Suspected Unapproved | ☐ |

**AGAINST DEPARTMENT/PROCESS**

| | | | | | | | |
|---|---|---|---|---|---|---|---|
| Skid-tube | ☐ | Cross tube | ☐ | Water Jet | ☐ | Engineering | ☐ |
| Machining | ☐ | Small Fab | ☐ | Prod. Eng. Coor. | ☐ | Quality | ☐ |
| Thermoforming | ☐ | Finishing | ☐ | Rec/Store/Packaging | ☐ | Other | ☐ |
| Large Fab | ☐ | Composite | ☐ | Supplier | ☐ | | |

Date :

Step #:

QTY Effective :

**MRB (QSI042) Approval**

**Description Work Order Deviation**

**Disposition**

**Completed By**

**Lead hand / Supervisor Approval Verification**

**QC / QA Coordinator Approval**

**Root Cause**

| | | | |
|---|---|---|---|
| Environment | ☐ | ☐ | No Re-verfication |
| Design | ☐ | ☐ | Operator |
| Doc/Data | ☐ | ☐ | Offset/Setup |
| Equip/Tooling | ☐ | ☐ | Supplier |
| Handling/Pre | ☐ | ☐ | Training |
| Material | ☐ | ☐ | Use for Testing |
| Internal Transport | ☐ | ☐ | Poor Information |
| Tribal Knowledge | ☐ | ☐ | Rushing |
| LOA | ☐ | ☐ | Product Improvement |
| Substation | ☐ | ☐ | Process Improvement |
| Past Expiry Date | ☐ | ☐ | Manufacturing Process |
| Misidentified | ☐ | ☐ | Past Due |

**FAULT CATEGORY**

| | | | |
|---|---|---|---|
| ☐ Pressure/Forced | ☐ Temperature/Cure | ☐ Power Loss/Surge | ☐ Positioned Wrong |
| ☐ Bending | ☐ Set-up | ☐ Folio/Program | ☐ Outside Dimensions |
| ☐ Centre Not Concentric | ☐ BOM/Route | ☐ Grain | ☐ Over/Under tolerance |
| ☐ Cracks | ☐ Broken/Damage/Defect | ☐ Weld | ☐ Part Incorrect |
| ☐ Crimp/Kink/Ripple/Wave | ☐ Inspection Incomplete/Unqualified | ☐ Wrong Stock Pulled | ☐ Part Lost/Missing |
| ☐ Cuffs | ☐ Contamination | ☐ Out of Sequence | ☐ Part Moved |
| ☐ Crushing | ☐ Countersink | ☐ Off-set | ☐ Drawing |
| ☐ Heat Treat | ☐ Cut Too Short | ☐ Mislabeled | ☐ Finish |
| ☐ Wave/Twist in Tube | ☐ Instructions Incomplete/Unclear | ☐ Fit/Function | ☐ Misread |
| ☐ Marks/Chatter | ☐ Drill Holes | ☐ Misaligned/off center | ☐ Turning Sequence |

☐ OTHER :

# Picklist Print

*Tuesday, March 07, 2017 2:08:46 PM*

**Work Order ID:** 157754 *157754*

**Parent Item:** 646.4001 *646 4001*

**Parent Item Name:** AS350 Cable Cutter System

**Start Date:** 3/14/2017 **Required Date:** 3/21/2017

**Start Qty:** 1.00 **Required Qty:** 1.00

| | | | | | | | | | |
|---|---|---|---|---|---|---|---|---|---|
| 646.3716 | Manufactured | No | | 100 | Each | 7.0000 | 1 | 1 | |
| *646 3716* Gauge Bracket | | | | | | | ** | MAR 14 2017 DAS 6 9-89 | DAS 27 9-89 |
| DAS 28 9-89 | | | | | | | | | |
| | | **Location** | **Loc Qty** | **Loc Code** | | | | | |
| | | cck105 | 7 | | | | | | |
| | | 140845 | 7 | | | | | | |
| 646.3717 | Manufactured | No | | 100 | Each | 13.0000 | 1 | 1 | |
| *646 3717* Doubler | | | | | | | ** | MAR 14 2017 DAS 6 9-89 | DAS 27 9-89 |
| DAS 28 9-89 | | | | | | | | | |
| | | **Location** | **Loc Qty** | **Loc Code** | | | | | |
| | | cck105 | 13 | | | | | | |
| | | 151423 | 5 | | | | | | |
| | | 155481 | 8 | | | | | | |
| 646.3718 | Manufactured | No | | 100 | Each | 23.0000 | 2 | 2 | |
| *646 3718* Custom Washer | | | | | | | ** | MAR 14 2017 DAS 6 9-89 | DAS 27 9-89 |
| DAS 28 9-89 | | | | | | | | | |
| | | **Location** | **Loc Qty** | **Loc Code** | | | | | |
| | | cck105 | 23 | | | | | | |
| | | 155395 | 23 | | | | | | |
| 646.3719 | Manufactured | No | | 100 | Each | 18.0000 | 2 | 2 | |
| *646 3719* Doubler | | | | | | | ** | MAR 14 2017 DAS 6 9-89 | DAS 27 9-89 |
| DAS 28 9-89 | | | | | | | | | |
| | | **Location** | **Loc Qty** | **Loc Code** | | | | | |
| | | cck105 | 18 | | | | | | |
| | | 151663 | 2 | | | | | | |
| | | 155273 | 8 | | | | | | |
| | | 155554 | 8 | | | | | | |

DQA: _____ Date: _____

# WORK ORDER NON-CONFORMANCE / UPDATE

DART AEROSPACE

QA Closed: Date: Work Order update only ☐

Work Order: _____

Part No. _____

NCR No.

**DISPOSITION**

| | |
|---|---|
| Rework | ☐ |
| Scrap | ☐ |
| Use-as-is | ☐ |
| Suspected Unapproved | ☐ |

**AGAINST DEPARTMENT/PROCESS**

| | | | |
|---|---|---|---|
| Skid-tube ☐ | Cross tube ☐ | Water Jet ☐ | Engineering ☐ |
| Machining ☐ | Small Fab ☐ | Prod. Eng. Coor. ☐ | Quality ☐ |
| Thermoforming ☐ | Finishing ☐ | Rec/Store/Packaging ☐ | Other ☐ |
| Large Fab ☐ | Composite ☐ | Supplier ☐ | |

| Date : | Step #: | QTY Effective : | MRB (QSI042) Approval |
|---|---|---|---|

| Description Work Order Deviation | Disposition | Completed By |
|---|---|---|
| | | Lead hand / Supervisor Approval Verification |
| | | QC / QA Coordinator Approval |

**Root Cause**

| | | | |
|---|---|---|---|
| Environment | ☐ | ☐ | No Re-verfication |
| Design | ☐ | ☐ | Operator |
| Doc/Data | ☐ | ☐ | Offset/Setup |
| Equip/Tooling | ☐ | ☐ | Supplier |
| Handling/Pre | ☐ | ☐ | Training |
| Material | ☐ | ☐ | Use for Testing |
| Internal Transport | ☐ | ☐ | Poor Information |
| Tribal Knowledge | ☐ | ☐ | Rushing |
| LOA | ☐ | ☐ | Product Improvement |
| Substation | ☐ | ☐ | Process Improvement |
| Past Expiry Date | ☐ | ☐ | Manufacturing Process |
| Misidentified | ☐ | ☐ | Past Due |

**FAULT CATEGORY**

| | | | |
|---|---|---|---|
| ☐ Pressure/Forced | ☐ Temperature/Cure | ☐ Power Loss/Surge | ☐ Positioned Wrong |
| ☐ Bending | ☐ Set-up | ☐ Folio/Program | ☐ Outside Dimensions |
| ☐ Centre Not Concentric | ☐ BOM/Route | ☐ Grain | ☐ Over/Under tolerance |
| ☐ Cracks | ☐ Broken/Damage/Defect | ☐ Weld | ☐ Part Incorrect |
| ☐ Crimp/Kink/Ripple/Wave | ☐ Inspection Incomplete/Unqualified | ☐ Wrong Stock Pulled | ☐ Part Lost/Missing |
| ☐ Cuffs | ☐ Contamination | ☐ Out of Sequence | ☐ Part Moved |
| ☐ Crushing | ☐ Countersink | ☐ Off-set | ☐ Drawing |
| ☐ Heat Treat | ☐ Cut Too Short | ☐ Mislabeled | ☐ Finish |
| ☐ Wave/Twist in Tube | ☐ Instructions Incomplete/Unclear | ☐ Fit/Function | ☐ Misread |
| ☐ Marks/Chatter | ☐ Drill Holes | ☐ Misaligned/off center | ☐ Turning Sequence |

☐ OTHER :

**Work Order ID:** 157754

*157754*

**Parent Item:** 646.4001

*646 4001*

**Parent Item Name:** AS350 Cable Cutter System

**Start Date:** 3/14/2017 **Required Date:** 3/21/2017

**Start Qty:** 1.00 **Required Qty:** 1.00

| | | | | | | | | | |
|---|---|---|---|---|---|---|---|---|---|
| 646.3810 | Manufactured | No | | 100 | Each | 5.0000 | 2 | 2 | MAR 1 4 2017 |
| *646 3810* | | | | | | | ** | | DAS 6 9-89 |
| Bracket | | | | | | | | | DAS 27 9-89 |
| | | **Location** | **Loc Qty** | **Loc Code** | | | | | |
| DAS 28 9-89 | | CCK106 | 5 | | | | | | |
| | | 155373 | 5 | | | | | | MAR 3 1 2017 |
| | | | | | | | | | 154764 |
| 646.3811 | Manufactured | No | | 100 | Each | 4.0000 | 1 | 1 | |
| *646 3811* | | | | | | | ** | | MAR 1 4 2017 DAS 6 9-89 |
| Radius Block | | | | | | | | | DAS 27 9-89 |
| DAS 28 9-89 | | **Location** | **Loc Qty** | **Loc Code** | | | | | |
| | | CCK106 | 4 | | | | | | |
| | | 151651 | 4 | | | | | | 1 |
| 646.3812 | Manufactured | No | | 100 | Each | 8.0000 | 2 | 2 | DAS 27 9-89 |
| *646 3812* | | | | | | | ** | | MAR 1 4 2017 |
| Gusset Bracket | | | | | | | | | DAS 6 9-89 |
| DAS 28 9-89 | | **Location** | **Loc Qty** | **Loc Code** | | | | | |
| | | cck102 | 8 | | | | | | |
| | | 155352 | 8 | | | | | | 4 |
| 646.3813 | Manufactured | No | | 100 | Each | 9.0000 | 1 | 1 | DAS 27 9-89 |
| *646 3813* | | | | | | | ** | | MAR 1 4 2017 DAS 6 9-89 |
| AS350 Strut Bracket | | | | | | | | | |
| DAS 28 9-89 | | **Location** | **Loc Qty** | **Loc Code** | | | | | |
| | | CCK106 | 9 | | | | | | |
| | | 152765 | 4 | | | | | | 1 |
| | | 155367 | 5 | | | | | | |

DQA: _____ Date: _____

# WORK ORDER NON-CONFORMANCE / UPDATE

QA Closed: Date: Work Order update only ☐

Work Order: _____

Part No. _____

NCR No.

**DISPOSITION**

| | |
|---|---|
| Rework | ☐ |
| Scrap | ☐ |
| Use-as-is | ☐ |
| Suspected Unapproved | ☐ |

**AGAINST DEPARTMENT/PROCESS**

| | | | | | | | |
|---|---|---|---|---|---|---|---|
| Skid-tube | ☐ | Cross tube | ☐ | Water Jet | ☐ | Engineering | ☐ |
| Machining | ☐ | Small Fab | ☐ | Prod. Eng. Coor. | ☐ | Quality | ☐ |
| Thermoforming | ☐ | Finishing | ☐ | Rec/Store/Packaging | ☐ | Other | ☐ |
| Large Fab | ☐ | Composite | ☐ | Supplier | ☐ | | |

Date :

Step #:

QTY Effective :

**MRB (QSI042) Approval**

**Description Work Order Deviation**

**Disposition**

**Completed By**

**Lead hand / Supervisor Approval Verification**

**QC / QA Coordinator Approval**

**Root Cause**

| | | | |
|---|---|---|---|
| Environment | ☐ | ☐ | No Re-verfication |
| Design | ☐ | ☐ | Operator |
| Doc/Data | ☐ | ☐ | Offset/Setup |
| Equip/Tooling | ☐ | ☐ | Supplier |
| Handling/Pre | ☐ | ☐ | Training |
| Material | ☐ | ☐ | Use for Testing |
| Internal Transport | ☐ | ☐ | Poor Information |
| Tribal Knowledge | ☐ | ☐ | Rushing |
| LOA | ☐ | ☐ | Product Improvement |
| Substation | ☐ | ☐ | Process Improvement |
| Past Expiry Date | ☐ | ☐ | Manufacturing Process |
| Misidentified | ☐ | ☐ | Past Due |

**FAULT CATEGORY**

| | | | |
|---|---|---|---|
| ☐ Pressure/Forced | ☐ Temperature/Cure | ☐ Power Loss/Surge | ☐ Positioned Wrong |
| ☐ Bending | ☐ Set-up | ☐ Folio/Program | ☐ Outside Dimensions |
| ☐ Centre Not Concentric | ☐ BOM/Route | ☐ Grain | ☐ Over/Under tolerance |
| ☐ Cracks | ☐ Broken/Damage/Defect | ☐ Weld | ☐ Part Incorrect |
| ☐ Crimp/Kink/Ripple/Wave | ☐ Inspection Incomplete/Unqualified | ☐ Wrong Stock Pulled | ☐ Part Lost/Missing |
| ☐ Cuffs | ☐ Contamination | ☐ Out of Sequence | ☐ Part Moved |
| ☐ Crushing | ☐ Countersink | ☐ Off-set | ☐ Drawing |
| ☐ Heat Treat | ☐ Cut Too Short | ☐ Mislabeled | ☐ Finish |
| ☐ Wave/Twist in Tube | ☐ Instructions Incomplete/Unclear | ☐ Fit/Function | ☐ Misread |
| ☐ Marks/Chatter | ☐ Drill Holes | ☐ Misaligned/off center | ☐ Turning Sequence |

☐ OTHER :

**Work Order ID:** 157754
*157754*
**Parent Item:** 646.4001
*646 4001*
**Parent Item Name:** AS350 Cable Cutter System
**Start Date:** 3/14/2017 **Required Date:** 3/21/2017
**Start Qty:** 1.00 **Required Qty:** 1.00

DAS 6 9-89

| | | | | | | | | |
|---|---|---|---|---|---|---|---|---|
| 646.3910 | Manufactured | No | | 100 | Each | 45.0000 | 4 | 4 |

*646 3910*
Shim
DAS 28 9-89
**
MAR 14 2017
DAS 27 9-89

| Location | Loc Qty | Loc Code |
|---|---|---|
| CCK106 | 21 | |
| 151458 | 9 | |
| 155260 | 12 | |
| CCK108A | 24 | |
| 156217 | 12 | |
| 156793 | 12 | |

| | | | | | | | | |
|---|---|---|---|---|---|---|---|---|
| 646.3911 | Manufactured | No | | 100 | Each | 17.0000 | 1 | 1 |

*646 3911*
Shim
DAS 28 9-89
**
MAR 14 2017
DAS 6 9-89
DAS 27 9-89

| Location | Loc Qty | Loc Code |
|---|---|---|
| CCK106 | 17 | |
| 126059 | 1 | |
| 126229 | 16 | |

| | | | | | | | | |
|---|---|---|---|---|---|---|---|---|
| 646.3912 | Manufactured | No | | 100 | Each | 43.0000 | 4 | 4 |

*646 3912*
Shim
DAS 28 9-89
**
MAR 14 2017
DAS 6 9-89
DAS 27 9-89

| Location | Loc Qty | Loc Code |
|---|---|---|
| CCK106 | 16 | |
| 151683 | 4 | |
| 155306 | 12 | |
| CCK108A | 27 | |
| 155639 | 12 | |
| 156874 | 15 | |

DQA: _____ Date: _____

# WORK ORDER NON-CONFORMANCE / UPDATE

QA Closed: Date: Work Order update only ☐

Work Order: _____

Part No. _____

NCR No.

**DISPOSITION**

| | |
|---|---|
| Rework | ☐ |
| Scrap | ☐ |
| Use-as-is | ☐ |
| Suspected Unapproved | ☐ |

**AGAINST DEPARTMENT/PROCESS**

| | | | | | | | |
|---|---|---|---|---|---|---|---|
| Skid-tube | ☐ | Cross tube | ☐ | Water Jet | ☐ | Engineering | ☐ |
| Machining | ☐ | Small Fab | ☐ | Prod. Eng. Coor. | ☐ | Quality | ☐ |
| Thermoforming | ☐ | Finishing | ☐ | Rec/Store/Packaging | ☐ | Other | ☐ |
| Large Fab | ☐ | Composite | ☐ | Supplier | ☐ | | |

| Date : | Step #: | QTY Effective : | MRB (QSI042) Approval |
|---|---|---|---|

| Description Work Order Deviation | Disposition | Completed By |
|---|---|---|
| | | Lead hand / Supervisor Approval Verification |
| | | QC / QA Coordinator Approval |

**Root Cause**

| | | | |
|---|---|---|---|
| Environment | ☐ | ☐ | No Re-verfication |
| Design | ☐ | ☐ | Operator |
| Doc/Data | ☐ | ☐ | Offset/Setup |
| Equip/Tooling | ☐ | ☐ | Supplier |
| Handling/Pre | ☐ | ☐ | Training |
| Material | ☐ | ☐ | Use for Testing |
| Internal Transport | ☐ | ☐ | Poor Information |
| Tribal Knowledge | ☐ | ☐ | Rushing |
| LOA | ☐ | ☐ | Product Improvement |
| Substation | ☐ | ☐ | Process Improvement |
| Past Expiry Date | ☐ | ☐ | Manufacturing Process |
| Misidentified | ☐ | ☐ | Past Due |

**FAULT CATEGORY**

| | | | |
|---|---|---|---|
| ☐ Pressure/Forced | ☐ Temperature/Cure | ☐ Power Loss/Surge | ☐ Positioned Wrong |
| ☐ Bending | ☐ Set-up | ☐ Folio/Program | ☐ Outside Dimensions |
| ☐ Centre Not Concentric | ☐ BOM/Route | ☐ Grain | ☐ Over/Under tolerance |
| ☐ Cracks | ☐ Broken/Damage/Defect | ☐ Weld | ☐ Part Incorrect |
| ☐ Crimp/Kink/Ripple/Wave | ☐ Inspection Incomplete/Unqualified | ☐ Wrong Stock Pulled | ☐ Part Lost/Missing |
| ☐ Cuffs | ☐ Contamination | ☐ Out of Sequence | ☐ Part Moved |
| ☐ Crushing | ☐ Countersink | ☐ Off-set | ☐ Drawing |
| ☐ Heat Treat | ☐ Cut Too Short | ☐ Mislabeled | ☐ Finish |
| ☐ Wave/Twist in Tube | ☐ Instructions Incomplete/Unclear | ☐ Fit/Function | ☐ Misread |
| ☐ Marks/Chatter | ☐ Drill Holes | ☐ Misaligned/off center | ☐ Turning Sequence |

☐ OTHER :

**Work Order ID:** 157754
*157754*
**Parent Item:** 646.4001
*646 4001*
**Parent Item Name:** AS350 Cable Cutter System

**Start Date:** 3/14/2017 **Required Date:** 3/21/2017
**Start Qty:** 1.00 **Required Qty:** 1.00

| | | | | | | | | |
|---|---|---|---|---|---|---|---|---|
| 646.3913 | Manufactured | No | | 100 | Each | 56.0000 | 1 | 1 |

*646 3913*
Shim

| Location | Loc Qty | Loc Code |
|---|---|---|
| CCK106 | 56 | |
| 126060 | 56 | |

| | | | | | | | | |
|---|---|---|---|---|---|---|---|---|
| 646.9410 | Manufactured | No | | 100 | Each | 65.0000 | 1 | 1 |

*646 9410*
Shim

| Location | Loc Qty | Loc Code |
|---|---|---|
| cck011 | 65 | |
| 140671 | 65 | |

| | | | | | | | | |
|---|---|---|---|---|---|---|---|---|
| 647.0112 | Manufactured | No | | 100 | Each | 65.0000 | 2 | 2 |

*647 0112*
Strut Bracket

| Location | Loc Qty | Loc Code |
|---|---|---|
| CCK106 | 40 | |
| 155480 | 40 | |
| CCK107 | 7 | |
| 154204 | 7 | |
| CCK108A | 18 | |
| 156756 | 18 | |

| | | | | | | | | |
|---|---|---|---|---|---|---|---|---|
| 647.7703 | Manufactured | No | | 100 | Each | 1.0000 | 2 | 2 |

*647 7703*
Strut Assembly

| Location | Loc Qty | Loc Code |
|---|---|---|
| CCK114 | 1 | |
| 154669 | 1 | |

DQA: _____ Date: _____

# WORK ORDER NON-CONFORMANCE / UPDATE

DART AEROSPACE

QA Closed: Date: Work Order update only ☐

Work Order: _____

Part No. _____

NCR No.

**DISPOSITION**

| | |
|---|---|
| Rework | ☐ |
| Scrap | ☐ |
| Use-as-is | ☐ |
| Suspected Unapproved | ☐ |

**AGAINST DEPARTMENT/PROCESS**

| | | | | | | | |
|---|---|---|---|---|---|---|---|
| Skid-tube | ☐ | Cross tube | ☐ | Water Jet | ☐ | Engineering | ☐ |
| Machining | ☐ | Small Fab | ☐ | Prod. Eng. Coor. | ☐ | Quality | ☐ |
| Thermoforming | ☐ | Finishing | ☐ | Rec/Store/Packaging | ☐ | Other | ☐ |
| Large Fab | ☐ | Composite | ☐ | Supplier | ☐ | | |

| Date : | Step #: | QTY Effective : | MRB (QSI042) Approval |
|---|---|---|---|

| Description Work Order Deviation | Disposition | |
|---|---|---|
| | | Completed By |
| | | Lead hand / Supervisor Approval Verification |
| | | QC / QA Coordinator Approval |

**Root Cause**

| | | | |
|---|---|---|---|
| Environment | ☐ | ☐ | No Re-verfication |
| Design | ☐ | ☐ | Operator |
| Doc/Data | ☐ | ☐ | Offset/Setup |
| Equip/Tooling | ☐ | ☐ | Supplier |
| Handling/Pre | ☐ | ☐ | Training |
| Material | ☐ | ☐ | Use for Testing |
| Internal Transport | ☐ | ☐ | Poor Information |
| Tribal Knowledge | ☐ | ☐ | Rushing |
| LOA | ☐ | ☐ | Product Improvement |
| Substation | ☐ | ☐ | Process Improvement |
| Past Expiry Date | ☐ | ☐ | Manufacturing Process |
| Misidentified | ☐ | ☐ | Past Due |

**FAULT CATEGORY**

| | | | |
|---|---|---|---|
| ☐ Pressure/Forced | ☐ Temperature/Cure | ☐ Power Loss/Surge | ☐ Positioned Wrong |
| ☐ Bending | ☐ Set-up | ☐ Folio/Program | ☐ Outside Dimensions |
| ☐ Centre Not Concentric | ☐ BOM/Route | ☐ Grain | ☐ Over/Under tolerance |
| ☐ Cracks | ☐ Broken/Damage/Defect | ☐ Weld | ☐ Part Incorrect |
| ☐ Crimp/Kink/Ripple/Wave | ☐ Inspection Incomplete/Unqualified | ☐ Wrong Stock Pulled | ☐ Part Lost/Missing |
| ☐ Cuffs | ☐ Contamination | ☐ Out of Sequence | ☐ Part Moved |
| ☐ Crushing | ☐ Countersink | ☐ Off-set | ☐ Drawing |
| ☐ Heat Treat | ☐ Cut Too Short | ☐ Mislabeled | ☐ Finish |
| ☐ Wave/Twist in Tube | ☐ Instructions Incomplete/Unclear | ☐ Fit/Function | ☐ Misread |
| ☐ Marks/Chatter | ☐ Drill Holes | ☐ Misaligned/off center | ☐ Turning Sequence |

☐ OTHER :

**Work Order ID:** 157754
*157754*
**Parent Item:** 646.4001
*646 4001*
**Parent Item Name:** AS350 Cable Cutter System
**Start Date:** 3/14/2017 **Required Date:** 3/21/2017
**Start Qty:** 1.00 **Required Qty:** 1.00

| | | | | | | | | | |
|---|---|---|---|---|---|---|---|---|---|
| 650.9201 | Manufactured | No | | 100 | Each | 18.0000 | ** | 2 | 2 |

*650 9201*
Eyelet Bracket Assembly

DAS 6 9-89 DAS 27 9-89 MAR 14 2017

DAS 28 9-89

| Location | Loc Qty | Loc Code | |
|---|---|---|---|
| cck127 | 18 | | |
| 155578 | 18 | | 2 |

| | | | | | | | | | |
|---|---|---|---|---|---|---|---|---|---|
| AN3-11A | Purchased | No | | 100 | Each | 478.0000 | ** | 10 | 10 |

*AN3-11A*
Bolt

DAS 6 9-89 DAS 27 9-89 MAR 14 2017

DAS 28 9-89

| Location | Loc Qty | Loc Code | |
|---|---|---|---|
| over003 | 250 | | |
| 153855 | 150 | | |
| m136192 | 100 | | |
| ST349 | 228 | | |
| 153855 | 228 | | 10 |

| | | | | | | | | | |
|---|---|---|---|---|---|---|---|---|---|
| AN3-12A | Purchased | No | | 100 | Each | 282.0000 | ** | 2 | 2 |

*AN3-12A*
Bolt

DAS 6 9-89 MAR 14 2017 DAS 27 9-89

DAS 28 9-89

| Location | Loc Qty | Loc Code | |
|---|---|---|---|
| over003 | 206 | | |
| 153854 | 206 | | |
| ST349 | 76 | | |
| m135603 | 76 | | 2 |

DQA: _____ Date: _____

# WORK ORDER NON-CONFORMANCE / UPDATE

DART AEROSPACE

QA Closed: Date: Work Order update only ☐

Work Order: _____

Part No. _____

NCR No.

**DISPOSITION**

| | |
|---|---|
| Rework | ☐ |
| Scrap | ☐ |
| Use-as-is | ☐ |
| Suspected Unapproved | ☐ |

**AGAINST DEPARTMENT/PROCESS**

| | | | | | | | |
|---|---|---|---|---|---|---|---|
| Skid-tube | ☐ | Cross tube | ☐ | Water Jet | ☐ | Engineering | ☐ |
| Machining | ☐ | Small Fab | ☐ | Prod. Eng. Coor. | ☐ | Quality | ☐ |
| Thermoforming | ☐ | Finishing | ☐ | Rec/Store/Packaging | ☐ | Other | ☐ |
| Large Fab | ☐ | Composite | ☐ | Supplier | ☐ | | ☐ |

| Date : | Step #: | QTY Effective : | MRB (QSI042) Approval |
|---|---|---|---|

| Description Work Order Deviation | Disposition | Completed By |
|---|---|---|
| | | Lead hand / Supervisor Approval Verification |
| | | QC / QA Coordinator Approval |

**Root Cause**

| | | | |
|---|---|---|---|
| Environment | ☐ | ☐ | No Re-verfication |
| Design | ☐ | ☐ | Operator |
| Doc/Data | ☐ | ☐ | Offset/Setup |
| Equip/Tooling | ☐ | ☐ | Supplier |
| Handling/Pre | ☐ | ☐ | Training |
| Material | ☐ | ☐ | Use for Testing |
| Internal Transport | ☐ | ☐ | Poor Information |
| Tribal Knowledge | ☐ | ☐ | Rushing |
| LOA | ☐ | ☐ | Product Improvement |
| Substation | ☐ | ☐ | Process Improvement |
| Past Expiry Date | ☐ | ☐ | Manufacturing Process |
| Misidentified | ☐ | ☐ | Past Due |

**FAULT CATEGORY**

| | | | |
|---|---|---|---|
| ☐ Pressure/Forced | ☐ Temperature/Cure | ☐ Power Loss/Surge | ☐ Positioned Wrong |
| ☐ Bending | ☐ Set-up | ☐ Folio/Program | ☐ Outside Dimensions |
| ☐ Centre Not Concentric | ☐ BOM/Route | ☐ Grain | ☐ Over/Under tolerance |
| ☐ Cracks | ☐ Broken/Damage/Defect | ☐ Weld | ☐ Part Incorrect |
| ☐ Crimp/Kink/Ripple/Wave | ☐ Inspection Incomplete/Unqualified | ☐ Wrong Stock Pulled | ☐ Part Lost/Missing |
| ☐ Cuffs | ☐ Contamination | ☐ Out of Sequence | ☐ Part Moved |
| ☐ Crushing | ☐ Countersink | ☐ Off-set | ☐ Drawing |
| ☐ Heat Treat | ☐ Cut Too Short | ☐ Mislabeled | ☐ Finish |
| ☐ Wave/Twist in Tube | ☐ Instructions Incomplete/Unclear | ☐ Fit/Function | ☐ Misread |
| ☐ Marks/Chatter | ☐ Drill Holes | ☐ Misaligned/off center | ☐ Turning Sequence |

☐ OTHER :

**Work Order ID:** 157754
*157754*
**Parent Item:** 646.4001
*646 4001*
**Parent Item Name:** AS350 Cable Cutter System
**Start Date:** 3/14/2017 **Required Date:** 3/21/2017
**Start Qty:** 1.00 **Required Qty:** 1.00

AN3-13A | Purchased | No | 100 | Each | 55.0000 | 1 | 1
*AN3-13A*
Bolt
DAS 28 9-89 DAS 6 9-89 MAR 14 2017 DAS 27 9-89

| Location | Loc Qty | Loc Code |
|---|---|---|
| GA | 16 | |
| m127070 | 16 | |
| ST349 | 39 | |
| 153845 | 38 | |
| m136406 | 1 | |

AN316C4R | Purchased | No | 100 | Each | 51.0000 | 2 | 2
*AN316C4R*
Nut, Jam
DAS 28 9-89 DAS 6 9-89 MAR 14 2017 DAS 27 9-89

| Location | Loc Qty | Loc Code |
|---|---|---|
| ST331 | 51 | |
| 153850 | 50 | |
| m136192 | 1 | |

AN3-3A | Purchased | No | 100 | Each | 216.0000 | 4 | 4
*AN3-3A*
Bolt
DAS 28 9-89 DAS 6 9-89 MAR 14 2017 DAS 27 9-89

| Location | Loc Qty | Loc Code |
|---|---|---|
| ST350 | 216 | |
| m136741 | 66 | |
| m136851 | 50 | |
| m136975 | 100 | |

AN3-4A | Purchased | No | 100 | Each | 315.0000 | 10 | 10
*AN3-4A*
Bolt
DAS 28 9-89 DAS 6 9-89 MAR 14 2017 DAS 27 9-89

| Location | Loc Qty | Loc Code |
|---|---|---|
| ST350 | 315 | |
| m136579 | 315 | |

DQA: _____ Date: _____

# WORK ORDER NON-CONFORMANCE / UPDATE

DART AEROSPACE

QA Closed: Date: Work Order update only ☐

Work Order: _____

Part No. _____

NCR No.

**DISPOSITION**

| | |
|---|---|
| Rework | ☐ |
| Scrap | ☐ |
| Use-as-is | ☐ |
| Suspected Unapproved | ☐ |

**AGAINST DEPARTMENT/PROCESS**

| | | | | | | | |
|---|---|---|---|---|---|---|---|
| Skid-tube | ☐ | Cross tube | ☐ | Water Jet | ☐ | Engineering | ☐ |
| Machining | ☐ | Small Fab | ☐ | Prod. Eng. Coor. | ☐ | Quality | ☐ |
| Thermoforming | ☐ | Finishing | ☐ | Rec/Store/Packaging | ☐ | Other | ☐ |
| Large Fab | ☐ | Composite | ☐ | Supplier | ☐ | | |

| Date : | Step #: | QTY Effective : | MRB (QSI042) Approval |
|---|---|---|---|
| | | | |

| Description Work Order Deviation | Disposition | Completed By |
|---|---|---|
| | | Lead hand / Supervisor Approval Verification |
| | | QC / QA Coordinator Approval |

**Root Cause**

| | | | |
|---|---|---|---|
| Environment | ☐ | ☐ | No Re-verfication |
| Design | ☐ | ☐ | Operator |
| Doc/Data | ☐ | ☐ | Offset/Setup |
| Equip/Tooling | ☐ | ☐ | Supplier |
| Handling/Pre | ☐ | ☐ | Training |
| Material | ☐ | ☐ | Use for Testing |
| Internal Transport | ☐ | ☐ | Poor Information |
| Tribal Knowledge | ☐ | ☐ | Rushing |
| LOA | ☐ | ☐ | Product Improvement |
| Substation | ☐ | ☐ | Process Improvement |
| Past Expiry Date | ☐ | ☐ | Manufacturing Process |
| Misidentified | ☐ | ☐ | Past Due |

**FAULT CATEGORY**

| | | | |
|---|---|---|---|
| ☐ Pressure/Forced | ☐ Temperature/Cure | ☐ Power Loss/Surge | ☐ Positioned Wrong |
| ☐ Bending | ☐ Set-up | ☐ Folio/Program | ☐ Outside Dimensions |
| ☐ Centre Not Concentric | ☐ BOM/Route | ☐ Grain | ☐ Over/Under tolerance |
| ☐ Cracks | ☐ Broken/Damage/Defect | ☐ Weld | ☐ Part Incorrect |
| ☐ Crimp/Kink/Ripple/Wave | ☐ Inspection Incomplete/Unqualified | ☐ Wrong Stock Pulled | ☐ Part Lost/Missing |
| ☐ Cuffs | ☐ Contamination | ☐ Out of Sequence | ☐ Part Moved |
| ☐ Crushing | ☐ Countersink | ☐ Off-set | ☐ Drawing |
| ☐ Heat Treat | ☐ Cut Too Short | ☐ Mislabeled | ☐ Finish |
| ☐ Wave/Twist in Tube | ☐ Instructions Incomplete/Unclear | ☐ Fit/Function | ☐ Misread |
| ☐ Marks/Chatter | ☐ Drill Holes | ☐ Misaligned/off center | ☐ Turning Sequence |

☐ OTHER :

**Work Order ID:** 157754
*157754*
**Parent Item:** 646.4001
*646 4001*
**Parent Item Name:** AS350 Cable Cutter System
**Start Date:** 3/14/2017 **Required Date:** 3/21/2017
**Start Qty:** 1.00 **Required Qty:** 1.00

| | | | | | | | | |
|---|---|---|---|---|---|---|---|---|
| AN3-5A | Purchased | No | | 100 | Each | 490.0000 | 2 | 2 |

*AN3-5A*
Bolt

DAS 28 9-89

| Location | Loc Qty | Loc Code |
|---|---|---|
| ST350 | 490 | |
| m136182 | 190 | |
| m136986 | 300 | |

**

MAR 1 4 2017 DAS 6 9-89 DAS 27 9-89

2

| | | | | | | | | |
|---|---|---|---|---|---|---|---|---|
| AN3-6A | Purchased | No | | 100 | Each | 146.0000 | 2 | 2 |

*AN3-6A*
Bolt

DAS 28 9-89

| Location | Loc Qty | Loc Code |
|---|---|---|
| ST350 | 146 | |
| 153844 | 146 | |

**

MAR 1 4 2017 DAS 6 9-89 DAS 27 9-89

2

| | | | | | | | | |
|---|---|---|---|---|---|---|---|---|
| AN44-5A | Purchased | No | | 100 | Each | 27.0000 | 2 | 2 |

*AN44-5A*
Eyebolt

DAS 28 9-89

| Location | Loc Qty | Loc Code |
|---|---|---|
| ST339 | 27 | |
| m135774 | 3 | |
| m136047 | 12 | |
| m136866 | 12 | |

**

MAR 1 4 2017 DAS 6 9-89 DAS 27 9-89

2

| | | | | | | | | |
|---|---|---|---|---|---|---|---|---|
| AN4C7A | Purchased | No | | 100 | Each | 78.0000 | 2 | 2 |

*AN4C7A*
BOLT

DAS 28 9-89

| Location | Loc Qty | Loc Code |
|---|---|---|
| OVER002 | 54 | |
| m136295 | 54 | |
| ST345 | 24 | |
| m135864 | 24 | |

**

MAR 1 4 2017 DAS 6 9-89 DAS 27 9-89

123900

DQA: _____ Date: _____

# WORK ORDER NON-CONFORMANCE / UPDATE

QA Closed: Date: Work Order update only ☐

Work Order: _____

Part No. _____

NCR No.

**DISPOSITION**

| | |
|---|---|
| Rework | ☐ |
| Scrap | ☐ |
| Use-as-is | ☐ |
| Suspected Unapproved | ☐ |

**AGAINST DEPARTMENT/PROCESS**

| | | | |
|---|---|---|---|
| Skid-tube ☐ | Cross tube ☐ | Water Jet ☐ | Engineering ☐ |
| Machining ☐ | Small Fab ☐ | Prod. Eng. Coor. ☐ | Quality ☐ |
| Thermoforming ☐ | Finishing ☐ | Rec/Store/Packaging ☐ | Other ☐ |
| Large Fab ☐ | Composite ☐ | Supplier ☐ | |

| Date : | Step #: | QTY Effective : | MRB (QSI042) Approval |
|---|---|---|---|
| **Description Work Order Deviation** | | **Disposition** | Completed By |
| | | | Lead hand / Supervisor Approval Verification |
| | | | QC / QA Coordinator Approval |

**Root Cause**

| | | | |
|---|---|---|---|
| Environment ☐ | ☐ No Re-verfication | Pressure/Forced ☐ | Temperature/Cure ☐ |
| Design ☐ | ☐ Operator | Bending ☐ | Set-up ☐ |
| Doc/Data ☐ | ☐ Offset/Setup | Centre Not Concentric ☐ | BOM/Route ☐ |
| Equip/Tooling ☐ | ☐ Supplier | Cracks ☐ | Broken/Damage/Defect ☐ |
| Handling/Pre ☐ | ☐ Training | Crimp/Kink/Ripple/Wave ☐ | Inspection Incomplete/Unqualified ☐ |
| Material ☐ | ☐ Use for Testing | Cuffs ☐ | Contamination ☐ |
| Internal Transport ☐ | ☐ Poor Information | Crushing ☐ | Countersink ☐ |
| Tribal Knowledge ☐ | ☐ Rushing | Heat Treat ☐ | Cut Too Short ☐ |
| LOA ☐ | ☐ Product Improvement | Wave/Twist in Tube ☐ | Instructions Incomplete/Unclear ☐ |
| Substation ☐ | ☐ Process Improvement | Marks/Chatter ☐ | Drill Holes ☐ |
| Past Expiry Date ☐ | ☐ Manufacturing Process | | |
| Misidentified ☐ | ☐ Past Due | OTHER : ☐ | |

**FAULT CATEGORY**

| | | | |
|---|---|---|---|
| Power Loss/Surge ☐ | Positioned Wrong ☐ | | |
| Folio/Program ☐ | Outside Dimensions ☐ | | |
| Grain ☐ | Over/Under tolerance ☐ | | |
| Weld ☐ | Part Incorrect ☐ | | |
| Wrong Stock Pulled ☐ | Part Lost/Missing ☐ | | |
| Out of Sequence ☐ | Part Moved ☐ | | |
| Off-set ☐ | Drawing ☐ | | |
| Mislabeled ☐ | Finish ☐ | | |
| Fit/Function ☐ | Misread ☐ | | |
| Misaligned/off center ☐ | Turning Sequence ☐ | | |

**Work Order ID:** 157754
*157754*
**Parent Item:** 646.4001
*646 4001*
**Parent Item Name:** AS350 Cable Cutter System

**Start Date:** 3/14/2017 **Required Date:** 3/21/2017
**Start Qty:** 1.00 **Required Qty:** 1.00

| | | | | | | | | |
|---|---|---|---|---|---|---|---|---|
| AN665-34R | Purchased | No | | 100 | Each | 36.0000 | 2 | 2 |

*AN665-34R*
Clevis

DAS 28 9-89

| Location | Loc Qty | Loc Code |
|---|---|---|
| ST330 | 36 | |
| 153852 | 36 | |

DAS 6 9-89 MAR 14 2017 DAS 27 9-89

2

| | | | | | | | | |
|---|---|---|---|---|---|---|---|---|
| CCR264SS3-02 | Purchased | No | | 100 | Each | 437.0000 | 36 | 36 |

*CCR264SS3-02*
Cherry Rivet

DAS 28 9-89

| Location | Loc Qty | Loc Code |
|---|---|---|
| CCK003 | 225 | |
| M136986 | 225 | |
| ST321 | 212 | |
| M136648 | 212 | |

DAS 6 9-89 MAR 14 2017 DAS 27 9-89

36

| | | | | | | | | |
|---|---|---|---|---|---|---|---|---|
| CR3213-5-3 | Purchased | No | | 100 | Each | 200.0000 | 14 | 14 |

*CR3213-5-3*
Cherry Rivet

DAS 28 9-89

| Location | Loc Qty | Loc Code |
|---|---|---|
| CCK003 | 100 | |
| m136851 | 100 | |
| ST319 | 100 | |
| m135865 | 10 | |
| m136537 | 90 | |

DAS 6 9-89 MAR 14 2017 DAS 27 9-89

14

| | | | | | | | | |
|---|---|---|---|---|---|---|---|---|
| MS20426AD5-7 | Purchased | No | | 100 | Each | 1,454.000 | 2 | 2 |

*MS20426AD5-7*
RIVET

DAS 28 9-89

| Location | Loc Qty | Loc Code |
|---|---|---|
| CCK004 | 703 | |
| 153848 | 703 | |
| ST311 | 751 | |
| M133922 | 751 | |

DAS 6 9-89 MAR 14 2017 DAS 27 9-89

2

DQA: _____ Date: _____

# WORK ORDER NON-CONFORMANCE / UPDATE

DART AEROSPACE

QA Closed: Date: Work Order update only ☐

Work Order: _____

Part No. _____

NCR No.

**DISPOSITION**

| | |
|---|---|
| Rework | ☐ |
| Scrap | ☐ |
| Use-as-is | ☐ |
| Suspected Unapproved | ☐ |

**AGAINST DEPARTMENT/PROCESS**

| | | | | | | | |
|---|---|---|---|---|---|---|---|
| Skid-tube | ☐ | Cross tube | ☐ | Water Jet | ☐ | Engineering | ☐ |
| Machining | ☐ | Small Fab | ☐ | Prod. Eng. Coor. | ☐ | Quality | ☐ |
| Thermoforming | ☐ | Finishing | ☐ | Rec/Store/Packaging | ☐ | Other | ☐ |
| Large Fab | ☐ | Composite | ☐ | Supplier | ☐ | | |

| Date : | Step #: | QTY Effective : | MRB (QSI042) Approval |
|---|---|---|---|
| | | | |

| Description Work Order Deviation | Disposition | Completed By |
|---|---|---|
| | | Lead hand / Supervisor Approval Verification |
| | | QC / QA Coordinator Approval |

**Root Cause**

| | | | |
|---|---|---|---|
| Environment | ☐ | ☐ | No Re-verfication |
| Design | ☐ | ☐ | Operator |
| Doc/Data | ☐ | ☐ | Offset/Setup |
| Equip/Tooling | ☐ | ☐ | Supplier |
| Handling/Pre | ☐ | ☐ | Training |
| Material | ☐ | ☐ | Use for Testing |
| Internal Transport | ☐ | ☐ | Poor Information |
| Tribal Knowledge | ☐ | ☐ | Rushing |
| LOA | ☐ | ☐ | Product Improvement |
| Substation | ☐ | ☐ | Process Improvement |
| Past Expiry Date | ☐ | ☐ | Manufacturing Process |
| Misidentified | ☐ | ☐ | Past Due |

**FAULT CATEGORY**

| | | | |
|---|---|---|---|
| ☐ Pressure/Forced | ☐ Temperature/Cure | ☐ Power Loss/Surge | ☐ Positioned Wrong |
| ☐ Bending | ☐ Set-up | ☐ Folio/Program | ☐ Outside Dimensions |
| ☐ Centre Not Concentric | ☐ BOM/Route | ☐ Grain | ☐ Over/Under tolerance |
| ☐ Cracks | ☐ Broken/Damage/Defect | ☐ Weld | ☐ Part Incorrect |
| ☐ Crimp/Kink/Ripple/Wave | ☐ Inspection Incomplete/Unqualified | ☐ Wrong Stock Pulled | ☐ Part Lost/Missing |
| ☐ Cuffs | ☐ Contamination | ☐ Out of Sequence | ☐ Part Moved |
| ☐ Crushing | ☐ Countersink | ☐ Off-set | ☐ Drawing |
| ☐ Heat Treat | ☐ Cut Too Short | ☐ Mislabeled | ☐ Finish |
| ☐ Wave/Twist in Tube | ☐ Instructions Incomplete/Unclear | ☐ Fit/Function | ☐ Misread |
| ☐ Marks/Chatter | ☐ Drill Holes | ☐ Misaligned/off center | ☐ Turning Sequence |

☐ OTHER :

**Work Order ID:** 157754
*157754*
**Parent Item:** 646.4001
*646 4001*
**Parent Item Name:** AS350 Cable Cutter System
**Start Date:** 3/14/2017 **Required Date:** 3/21/2017
**Start Qty:** 1.00 **Required Qty:** 1.00

| | | | | | | | | | | |
|---|---|---|---|---|---|---|---|---|---|---|
| MS20470AD5-5.5 | | Purchased | No | | 100 | Each | 734.0000 | 8 | 8 | DAS 6 9-89 |
| *MS20470AD5-5.5* | | | | | | | | ** | | DAS 27 9-89 |
| Rivet | | | | | | | | | | MAR 1 4 2017 |

DAS 28 9-89

| Location | Loc Qty | Loc Code |
|---|---|---|
| ST309 | 734 | |
| m134063 | 734 | |

8

| | | | | | | | | | | |
|---|---|---|---|---|---|---|---|---|---|---|
| MS20470AD5-6 | | Purchased | No | | 100 | Each | 624.0000 | 8 | 8 | DAS 6 9-89 |
| *MS20470AD5-6* | | | | | | | | ** | | DAS 27 9-89 |
| RIVET | | | | | | | | | | MAR 1 4 2017 |

DAS 28 9-89

| Location | Loc Qty | Loc Code |
|---|---|---|
| ST309 | 624 | |
| 124089 | 624 | |

8

| | | | | | | | | | | |
|---|---|---|---|---|---|---|---|---|---|---|
| MS20470AD5-7 | | Purchased | No | | 100 | Each | 380.0000 | 3 | 3 | DAS 6 9-89 |
| *MS20470AD5-7* | | | | | | | | ** | | DAS 27 9-89 |
| Rivet | | | | | | | | | | MAR 1 4 2017 |

DAS 28 9-89

| Location | Loc Qty | Loc Code |
|---|---|---|
| ST309 | 380 | |
| 123425 | 380 | |

3

| | | | | | | | | | | |
|---|---|---|---|---|---|---|---|---|---|---|
| MS21042-08 | MS21042L08 | Purchased | No | | 100 | Each | 0.0000 | 2 | 2 | DAS 6 9-89 |
| *MS21042-08* | | | | | | | | ** | 136643 | DAS 27 9-89 |
| USE MS21042L08 | | | | | | | | | | MAR 1 4 2017 |
| MS21042-3 | MS21042L3 | Purchased | No | | 100 | Each | 0.0000 | 2 | 2 | DAS 6 9-89 |
| *MS21042-3* | | | | | | | | ** | 136554 | DAS 27 9-89 |
| Nut | | | | | | | | | | MAR 1 4 2017 |

DAS 28 9-89

DQA: _____ Date: _____

# WORK ORDER NON-CONFORMANCE / UPDATE

DART AEROSPACE

QA Closed: Date: Work Order update only ☐

Work Order: _____

Part No. _____

NCR No.

**DISPOSITION**

| | |
|---|---|
| Rework | ☐ |
| Scrap | ☐ |
| Use-as-is | ☐ |
| Suspected Unapproved | ☐ |

**AGAINST DEPARTMENT/PROCESS**

| | | | | | | | |
|---|---|---|---|---|---|---|---|
| Skid-tube | ☐ | Cross tube | ☐ | Water Jet | ☐ | Engineering | ☐ |
| Machining | ☐ | Small Fab | ☐ | Prod. Eng. Coor. | ☐ | Quality | ☐ |
| Thermoforming | ☐ | Finishing | ☐ | Rec/Store/Packaging | ☐ | Other | ☐ |
| Large Fab | ☐ | Composite | ☐ | Supplier | ☐ | | |

Date :

Step #:

QTY Effective :

**MRB (QSI042) Approval**

**Description Work Order Deviation**

**Disposition**

**Completed By**

**Lead hand / Supervisor Approval Verification**

**QC / QA Coordinator Approval**

**Root Cause**

| | | | |
|---|---|---|---|
| Environment | ☐ | ☐ | No Re-verfication |
| Design | ☐ | ☐ | Operator |
| Doc/Data | ☐ | ☐ | Offset/Setup |
| Equip/Tooling | ☐ | ☐ | Supplier |
| Handling/Pre | ☐ | ☐ | Training |
| Material | ☐ | ☐ | Use for Testing |
| Internal Transport | ☐ | ☐ | Poor Information |
| Tribal Knowledge | ☐ | ☐ | Rushing |
| LOA | ☐ | ☐ | Product Improvement |
| Substation | ☐ | ☐ | Process Improvement |
| Past Expiry Date | ☐ | ☐ | Manufacturing Process |
| Misidentified | ☐ | ☐ | Past Due |

**FAULT CATEGORY**

| | | | |
|---|---|---|---|
| ☐ Pressure/Forced | ☐ Temperature/Cure | ☐ Power Loss/Surge | ☐ Positioned Wrong |
| ☐ Bending | ☐ Set-up | ☐ Folio/Program | ☐ Outside Dimensions |
| ☐ Centre Not Concentric | ☐ BOM/Route | ☐ Grain | ☐ Over/Under tolerance |
| ☐ Cracks | ☐ Broken/Damage/Defect | ☐ Weld | ☐ Part Incorrect |
| ☐ Crimp/Kink/Ripple/Wave | ☐ Inspection Incomplete/Unqualified | ☐ Wrong Stock Pulled | ☐ Part Lost/Missing |
| ☐ Cuffs | ☐ Contamination | ☐ Out of Sequence | ☐ Part Moved |
| ☐ Crushing | ☐ Countersink | ☐ Off-set | ☐ Drawing |
| ☐ Heat Treat | ☐ Cut Too Short | ☐ Mislabeled | ☐ Finish |
| ☐ Wave/Twist in Tube | ☐ Instructions Incomplete/Unclear | ☐ Fit/Function | ☐ Misread |
| ☐ Marks/Chatter | ☐ Drill Holes | ☐ Misaligned/off center | ☐ Turning Sequence |

☐ OTHER :

**Work Order ID:** 157754
*157754*
**Parent Item:** 646.4001
*646 4001*
**Parent Item Name:** AS350 Cable Cutter System

**Start Date:** 3/14/2017 **Required Date:** 3/21/2017
**Start Qty:** 1.00 **Required Qty:** 1.00

| | | | | | | | | |
|---|---|---|---|---|---|---|---|---|
| MS21042L3 | Purchased | No | | 100 | Each | 1,446.000 | 61 | 61 |

*MS21042L3*
Nut

MAR 14 2017 DAS 6 9-89 DAS 27 9-89

DAS 28 9-89

| Location | Loc Qty | Loc Code | |
|---|---|---|---|
| FP001 | 100 | | |
| m135945 | 100 | | |
| GA | 248 | | |
| m134360 | 102 | | |
| M136665 | 146 | | |
| OVER007 | 300 | | |
| m134360 | 0 | | |
| M136665 | 300 | | |
| ST303 | 798 | | |
| M136554 | 500 | | 61 |
| M136838 | 298 | | |

| | | | | | | | | |
|---|---|---|---|---|---|---|---|---|
| MS21042L4 | Purchased | No | | 100 | Each | 2,301.000 | 2 | 2 |

*MS21042L4*
Nut

MAR 14 2017 DAS 6 9-89 DAS 27 9-89

DAS 28 9-89

| Location | Loc Qty | Loc Code | |
|---|---|---|---|
| FP001 | 18 | | |
| m133363 | 18 | | |
| GA | 187 | | |
| m135058 | 187 | | |
| OVER007 | 935 | | |
| m136450 | 500 | | |
| m136986 | 435 | | |
| ST303 | 1161 | | |
| m136648 | 161 | | |
| m136838 | 1000 | | 2 |

DQA: _____ Date: _____

# WORK ORDER NON-CONFORMANCE / UPDATE

QA Closed: Date: Work Order update only ☐

Work Order: _____

Part No. _____

NCR No.

**DISPOSITION**

| | |
|---|---|
| Rework | ☐ |
| Scrap | ☐ |
| Use-as-is | ☐ |
| Suspected Unapproved | ☐ |

**AGAINST DEPARTMENT/PROCESS**

| | | | | | | | |
|---|---|---|---|---|---|---|---|
| Skid-tube | ☐ | Cross tube | ☐ | Water Jet | ☐ | Engineering | ☐ |
| Machining | ☐ | Small Fab | ☐ | Prod. Eng. Coor. | ☐ | Quality | ☐ |
| Thermoforming | ☐ | Finishing | ☐ | Rec/Store/Packaging | ☐ | Other | ☐ |
| Large Fab | ☐ | Composite | ☐ | Supplier | ☐ | | |

| Date : | Step #: | QTY Effective : | MRB (QSI042) Approval |
|---|---|---|---|

| Description Work Order Deviation | Disposition | Completed By |
|---|---|---|
| | | Lead hand / Supervisor Approval Verification |
| | | QC / QA Coordinator Approval |

**Root Cause**

| | | | |
|---|---|---|---|
| Environment | ☐ | ☐ | No Re-verfication |
| Design | ☐ | ☐ | Operator |
| Doc/Data | ☐ | ☐ | Offset/Setup |
| Equip/Tooling | ☐ | ☐ | Supplier |
| Handling/Pre | ☐ | ☐ | Training |
| Material | ☐ | ☐ | Use for Testing |
| Internal Transport | ☐ | ☐ | Poor Information |
| Tribal Knowledge | ☐ | ☐ | Rushing |
| LOA | ☐ | ☐ | Product Improvement |
| Substation | ☐ | ☐ | Process Improvement |
| Past Expiry Date | ☐ | ☐ | Manufacturing Process |
| Misidentified | ☐ | ☐ | Past Due |

**FAULT CATEGORY**

| | | | |
|---|---|---|---|
| ☐ Pressure/Forced | ☐ Temperature/Cure | ☐ Power Loss/Surge | ☐ Positioned Wrong |
| ☐ Bending | ☐ Set-up | ☐ Folio/Program | ☐ Outside Dimensions |
| ☐ Centre Not Concentric | ☐ BOM/Route | ☐ Grain | ☐ Over/Under tolerance |
| ☐ Cracks | ☐ Broken/Damage/Defect | ☐ Weld | ☐ Part Incorrect |
| ☐ Crimp/Kink/Ripple/Wave | ☐ Inspection Incomplete/Unqualified | ☐ Wrong Stock Pulled | ☐ Part Lost/Missing |
| ☐ Cuffs | ☐ Contamination | ☐ Out of Sequence | ☐ Part Moved |
| ☐ Crushing | ☐ Countersink | ☐ Off-set | ☐ Drawing |
| ☐ Heat Treat | ☐ Cut Too Short | ☐ Mislabeled | ☐ Finish |
| ☐ Wave/Twist in Tube | ☐ Instructions Incomplete/Unclear | ☐ Fit/Function | ☐ Misread |
| ☐ Marks/Chatter | ☐ Drill Holes | ☐ Misaligned/off center | ☐ Turning Sequence |

☐ OTHER :

**Work Order ID:** 157754
*157754*
**Parent Item:** 646.4001
*646 4001*
**Parent Item Name:** AS350 Cable Cutter System
**Start Date:** 3/14/2017 **Required Date:** 3/21/2017
**Start Qty:** 1.00 **Required Qty:** 1.00

| | | | | | | | | |
|---|---|---|---|---|---|---|---|---|
| MS21047-3 | Purchased | No | | 100 | Each | 220.0000 | 18 | 18 |

*MS21047-3*
Nut Plate

DAS 28 9-89 DAS 27 9-89 DAS 6 9-89 MAR 14 2017

| Location | Loc Qty | Loc Code | |
|---|---|---|---|
| ST301 | 220 | | |
| m136442 | 30 | | 15 |
| m136740 | 28 | | 3 |
| m136781 | 62 | | |
| m136986 | 100 | | |

| | | | | | | | | |
|---|---|---|---|---|---|---|---|---|
| MS24693-C278 | Purchased | No | | 100 | Each | 80.0000 | 5 | 5 |

*MS24693-C278*
Screw

DAS 28 9-89 DAS 27 9-89 DAS 6 9-89 MAR 14 2017

| Location | Loc Qty | Loc Code | |
|---|---|---|---|
| ST287 | 80 | | |
| m136554 | 80 | | 5 |

| | | | | | | | | |
|---|---|---|---|---|---|---|---|---|
| MS24694-S51 | Purchased | No | | 100 | Each | 342.0000 | 5 | 5 |

*MS24694-S51*
Screw

DAS 28 9-89 DAS 27 9-89 DAS 6 9-89 MAR 14 2017

| Location | Loc Qty | Loc Code | |
|---|---|---|---|
| ST284 | 342 | | |
| m135442 | 92 | | 3 |
| m136866 | 250 | | 2 |

| | | | | | | | | |
|---|---|---|---|---|---|---|---|---|
| MS24694-S54 | Purchased | No | | 100 | Each | 211.0000 | 2 | 2 |

*MS24694-S54*
SCREW

DAS 28 9-89 DAS 27 9-89 DAS 6 9-89 MAR 14 2017

| Location | Loc Qty | Loc Code | |
|---|---|---|---|
| ST284 | 211 | | |
| 153846 | 157 | | |
| m135948 | 54 | | 2 |

DQA: _____ Date: _____

# WORK ORDER NON-CONFORMANCE / UPDATE

QA Closed: Date: Work Order update only ☐

Work Order: _____

Part No. _____

NCR No.

**DISPOSITION**

| | |
|---|---|
| Rework | ☐ |
| Scrap | ☐ |
| Use-as-is | ☐ |
| Suspected Unapproved | ☐ |

**AGAINST DEPARTMENT/PROCESS**

| | | | | | | | |
|---|---|---|---|---|---|---|---|
| Skid-tube | ☐ | Cross tube | ☐ | Water Jet | ☐ | Engineering | ☐ |
| Machining | ☐ | Small Fab | ☐ | Prod. Eng. Coor. | ☐ | Quality | ☐ |
| Thermoforming | ☐ | Finishing | ☐ | Rec/Store/Packaging | ☐ | Other | ☐ |
| Large Fab | ☐ | Composite | ☐ | Supplier | ☐ | | ☐ |

| Date : | Step #: | QTY Effective : | MRB (QSI042) Approval |
|---|---|---|---|
| | | | |

| Description Work Order Deviation | Disposition | Completed By |
|---|---|---|
| | | |
| | | Lead hand / Supervisor Approval Verification |
| | | QC / QA Coordinator Approval |

**Root Cause**

| | | | |
|---|---|---|---|
| Environment | ☐ | ☐ | No Re-verfication |
| Design | ☐ | ☐ | Operator |
| Doc/Data | ☐ | ☐ | Offset/Setup |
| Equip/Tooling | ☐ | ☐ | Supplier |
| Handling/Pre | ☐ | ☐ | Training |
| Material | ☐ | ☐ | Use for Testing |
| Internal Transport | ☐ | ☐ | Poor Information |
| Tribal Knowledge | ☐ | ☐ | Rushing |
| LOA | ☐ | ☐ | Product Improvement |
| Substation | ☐ | ☐ | Process Improvement |
| Past Expiry Date | ☐ | ☐ | Manufacturing Process |
| Misidentified | ☐ | ☐ | Past Due |

**FAULT CATEGORY**

| | | | |
|---|---|---|---|
| ☐ Pressure/Forced | ☐ Temperature/Cure | ☐ Power Loss/Surge | ☐ Positioned Wrong |
| ☐ Bending | ☐ Set-up | ☐ Folio/Program | ☐ Outside Dimensions |
| ☐ Centre Not Concentric | ☐ BOM/Route | ☐ Grain | ☐ Over/Under tolerance |
| ☐ Cracks | ☐ Broken/Damage/Defect | ☐ Weld | ☐ Part Incorrect |
| ☐ Crimp/Kink/Ripple/Wave | ☐ Inspection Incomplete/Unqualified | ☐ Wrong Stock Pulled | ☐ Part Lost/Missing |
| ☐ Cuffs | ☐ Contamination | ☐ Out of Sequence | ☐ Part Moved |
| ☐ Crushing | ☐ Countersink | ☐ Off-set | ☐ Drawing |
| ☐ Heat Treat | ☐ Cut Too Short | ☐ Mislabeled | ☐ Finish |
| ☐ Wave/Twist in Tube | ☐ Instructions Incomplete/Unclear | ☐ Fit/Function | ☐ Misread |
| ☐ Marks/Chatter | ☐ Drill Holes | ☐ Misaligned/off center | ☐ Turning Sequence |

☐ OTHER :

**Work Order ID:** 157754
*157754*
**Parent Item:** 646.4001
*646 4001*
**Parent Item Name:** AS350 Cable Cutter System
**Start Date:** 3/14/2017 **Required Date:** 3/21/2017
**Start Qty:** 1.00 **Required Qty:** 1.00

| | | | | | | | | |
|---|---|---|---|---|---|---|---|---|
| MS24694-S55 | Purchased | No | | 100 | Each | 326.0000 | 3 | 3 |

*MS24694-S55*
Screw

| Location | Loc Qty | Loc Code |
|---|---|---|
| over006 | 247 | |
| 153847 | 247 | |
| ST283 | 79 | |
| m136042 | 79 | |

| | | | | | | | | |
|---|---|---|---|---|---|---|---|---|
| MS27039-08-13 | Purchased | No | | 100 | Each | 364.0000 | 2 | 2 |

*MS27039-08-13*
Screw

| Location | Loc Qty | Loc Code |
|---|---|---|
| over006 | 325 | |
| 153849 | 325 | |
| ST278 | 39 | |
| m136199 | 39 | |

| | | | | | | | | |
|---|---|---|---|---|---|---|---|---|
| MS27039-1-10 | Purchased | No | | 100 | Each | 113.0000 | 2 | 2 |

*MS27039-1-10*
SCREW

| Location | Loc Qty | Loc Code |
|---|---|---|
| GA | 17 | |
| m129541 | 17 | |
| ST280 | 96 | |
| m135774 | 96 | |

| | | | | | | | | |
|---|---|---|---|---|---|---|---|---|
| MS27039-1-12 | Purchased | No | | 100 | Each | 92.0000 | 6 | 6 |

*MS27039-1-12*
Screw

| Location | Loc Qty | Loc Code |
|---|---|---|
| ST280 | 92 | |
| m136537 | 92 | |

DQA: _____ Date: _____

# WORK ORDER NON-CONFORMANCE / UPDATE

DART AEROSPACE

QA Closed: Date: Work Order update only ☐

Work Order: _____

Part No. _____

NCR No.

**DISPOSITION**

| | |
|---|---|
| Rework | ☐ |
| Scrap | ☐ |
| Use-as-is | ☐ |
| Suspected Unapproved | ☐ |

**AGAINST DEPARTMENT/PROCESS**

| | | | | | | | |
|---|---|---|---|---|---|---|---|
| Skid-tube | ☐ | Cross tube | ☐ | Water Jet | ☐ | Engineering | ☐ |
| Machining | ☐ | Small Fab | ☐ | Prod. Eng. Coor. | ☐ | Quality | ☐ |
| Thermoforming | ☐ | Finishing | ☐ | Rec/Store/Packaging | ☐ | Other | ☐ |
| Large Fab | ☐ | Composite | ☐ | Supplier | ☐ | | |

| Date : | Step #: | QTY Effective : | MRB (QSI042) Approval |
|---|---|---|---|

| Description Work Order Deviation | Disposition | Completed By |
|---|---|---|
| | | Lead hand / Supervisor Approval Verification |
| | | QC / QA Coordinator Approval |

**Root Cause**

| | | | |
|---|---|---|---|
| Environment | ☐ | ☐ | No Re-verfication |
| Design | ☐ | ☐ | Operator |
| Doc/Data | ☐ | ☐ | Offset/Setup |
| Equip/Tooling | ☐ | ☐ | Supplier |
| Handling/Pre | ☐ | ☐ | Training |
| Material | ☐ | ☐ | Use for Testing |
| Internal Transport | ☐ | ☐ | Poor Information |
| Tribal Knowledge | ☐ | ☐ | Rushing |
| LOA | ☐ | ☐ | Product Improvement |
| Substation | ☐ | ☐ | Process Improvement |
| Past Expiry Date | ☐ | ☐ | Manufacturing Process |
| Misidentified | ☐ | ☐ | Past Due |

**FAULT CATEGORY**

| | | | |
|---|---|---|---|
| ☐ Pressure/Forced | ☐ Temperature/Cure | ☐ Power Loss/Surge | ☐ Positioned Wrong |
| ☐ Bending | ☐ Set-up | ☐ Folio/Program | ☐ Outside Dimensions |
| ☐ Centre Not Concentric | ☐ BOM/Route | ☐ Grain | ☐ Over/Under tolerance |
| ☐ Cracks | ☐ Broken/Damage/Defect | ☐ Weld | ☐ Part Incorrect |
| ☐ Crimp/Kink/Ripple/Wave | ☐ Inspection Incomplete/Unqualified | ☐ Wrong Stock Pulled | ☐ Part Lost/Missing |
| ☐ Cuffs | ☐ Contamination | ☐ Out of Sequence | ☐ Part Moved |
| ☐ Crushing | ☐ Countersink | ☐ Off-set | ☐ Drawing |
| ☐ Heat Treat | ☐ Cut Too Short | ☐ Mislabeled | ☐ Finish |
| ☐ Wave/Twist in Tube | ☐ Instructions Incomplete/Unclear | ☐ Fit/Function | ☐ Misread |
| ☐ Marks/Chatter | ☐ Drill Holes | ☐ Misaligned/off center | ☐ Turning Sequence |

☐ OTHER :

**Work Order ID:** 157754
*157754*
**Parent Item:** 646.4001
*646 4001*
**Parent Item Name:** AS350 Cable Cutter System
**Start Date:** 3/14/2017 **Required Date:** 3/21/2017
**Start Qty:** 1.00 **Required Qty:** 1.00

| | | | | | | | | | |
|---|---|---|---|---|---|---|---|---|---|
| MS27039-1-16 | Purchased | No | | 100 | Each | 225.0000 | 24 | 24 | |
| *MS27039-1-16* | | | | | | | ** | | |
| Screw | | | | | | | | | |

| Location | Loc Qty | Loc Code |
|---|---|---|
| over006 | 100 | |
| m136851 | 100 | |
| ST280 | 125 | |
| m136537 | 25 | |
| m136975 | 100 | |

| | | | | | | | | | |
|---|---|---|---|---|---|---|---|---|---|
| MS27039-1-19 | Purchased | No | | 100 | Each | 178.0000 | 22 | 22 | |
| *MS27039-1-19* | | | | | | | ** | | |
| Screw | | | | | | | | | |

| Location | Loc Qty | Loc Code |
|---|---|---|
| GA | 80 | |
| m134134 | 80 | |
| ST280 | 98 | |
| m136648 | 98 | |

| | | | | | | | | | |
|---|---|---|---|---|---|---|---|---|---|
| MS27039-1-20 | Purchased | No | | 100 | Each | 99.0000 | 2 | 2 | |
| *MS27039-1-20* | | | | | | | ** | | |
| Screw | | | | | | | | | |

| Location | Loc Qty | Loc Code |
|---|---|---|
| ST280 | 99 | |
| m136554 | 99 | |

| | | | | | | | | | |
|---|---|---|---|---|---|---|---|---|---|
| MS27039-1-21 | Purchased | No | | 100 | Each | 183.0000 | 4 | 4 | |
| *MS27039-1-21* | | | | | | | ** | | |
| Screw | | | | | | | | | |

| Location | Loc Qty | Loc Code |
|---|---|---|
| ST280 | 183 | |
| m127904 | 183 | |

DQA: _____ Date: _____

# WORK ORDER NON-CONFORMANCE / UPDATE

DART AEROSPACE

QA Closed: Date: Work Order update only ☐

Work Order: _____

Part No. _____

NCR No.

**DISPOSITION**

| | |
|---|---|
| Rework | ☐ |
| Scrap | ☐ |
| Use-as-is | ☐ |
| Suspected Unapproved | ☐ |

**AGAINST DEPARTMENT/PROCESS**

| | | | | | | | |
|---|---|---|---|---|---|---|---|
| Skid-tube | ☐ | Cross tube | ☐ | Water Jet | ☐ | Engineering | ☐ |
| Machining | ☐ | Small Fab | ☐ | Prod. Eng. Coor. | ☐ | Quality | ☐ |
| Thermoforming | ☐ | Finishing | ☐ | Rec/Store/Packaging | ☐ | Other | ☐ |
| Large Fab | ☐ | Composite | ☐ | Supplier | ☐ | | |

Date :

Step #:

QTY Effective :

**MRB (QSI042) Approval**

**Description Work Order Deviation**

**Disposition**

**Completed By**

**Lead hand / Supervisor Approval Verification**

**QC / QA Coordinator Approval**

**Root Cause**

| | | | |
|---|---|---|---|
| Environment | ☐ | ☐ | No Re-verfication |
| Design | ☐ | ☐ | Operator |
| Doc/Data | ☐ | ☐ | Offset/Setup |
| Equip/Tooling | ☐ | ☐ | Supplier |
| Handling/Pre | ☐ | ☐ | Training |
| Material | ☐ | ☐ | Use for Testing |
| Internal Transport | ☐ | ☐ | Poor Information |
| Tribal Knowledge | ☐ | ☐ | Rushing |
| LOA | ☐ | ☐ | Product Improvement |
| Substation | ☐ | ☐ | Process Improvement |
| Past Expiry Date | ☐ | ☐ | Manufacturing Process |
| Misidentified | ☐ | ☐ | Past Due |

**FAULT CATEGORY**

| | | | |
|---|---|---|---|
| ☐ Pressure/Forced | ☐ Temperature/Cure | ☐ Power Loss/Surge | ☐ Positioned Wrong |
| ☐ Bending | ☐ Set-up | ☐ Folio/Program | ☐ Outside Dimensions |
| ☐ Centre Not Concentric | ☐ BOM/Route | ☐ Grain | ☐ Over/Under tolerance |
| ☐ Cracks | ☐ Broken/Damage/Defect | ☐ Weld | ☐ Part Incorrect |
| ☐ Crimp/Kink/Ripple/Wave | ☐ Inspection Incomplete/Unqualified | ☐ Wrong Stock Pulled | ☐ Part Lost/Missing |
| ☐ Cuffs | ☐ Contamination | ☐ Out of Sequence | ☐ Part Moved |
| ☐ Crushing | ☐ Countersink | ☐ Off-set | ☐ Drawing |
| ☐ Heat Treat | ☐ Cut Too Short | ☐ Mislabeled | ☐ Finish |
| ☐ Wave/Twist in Tube | ☐ Instructions Incomplete/Unclear | ☐ Fit/Function | ☐ Misread |
| ☐ Marks/Chatter | ☐ Drill Holes | ☐ Misaligned/off center | ☐ Turning Sequence |

☐ OTHER :

**Work Order ID:** 157754
*157754*
**Parent Item:** 646.4001
*646 4001*
**Parent Item Name:** AS350 Cable Cutter System
**Start Date:** 3/14/2017 **Required Date:** 3/21/2017
**Start Qty:** 1.00 **Required Qty:** 1.00

NAS1149F0332P Purchased No 100 Each 2,053.000 144 144
*NAS1149F0332P*
Washer
DAS 6 9-89 MAR 14 2017 DAS 27 9-89
DAS 28 9-89

| Location | Loc Qty | Loc Code |
|---|---|---|
| GA | 335 | |
| m133709 | 335 | |
| ST262 | 1718 | |
| m136442 | 15 | |
| m136835 | 1703 | |

NAS1149F0363P Purchased No 100 Each 115.0000 2 2
*NAS1149F0363P*
WASHER
DAS 6 9-89 MAR 14 2017 DAS 27 9-89
DAS 28 9-89

| Location | Loc Qty | Loc Code |
|---|---|---|
| ST262 | 115 | |
| 124555 | 115 | |

NAS1149F0432P Purchased No 100 Each 707.0000 4 4
*NAS1149F0432P*
WASHER
DAS 6 9-89 MAR 14 2017 DAS 27 9-89
DAS 28 9-89

| Location | Loc Qty | Loc Code |
|---|---|---|
| ST262 | 707 | |
| M136442 | 707 | |

NAS1149FN832P Purchased No 100 Each 2,261.000 4 4
*NAS1149FN832P*
Washer
DAS 6 9-89 MAR 14 2017 DAS 27 9-89
DAS 28 9-89

| Location | Loc Qty | Loc Code |
|---|---|---|
| GA | 761 | |
| M135058 | 232 | |
| M136182 | 529 | |
| ST263 | 1500 | |
| M136866 | 1500 | |

DQA: _____ Date: _____

# WORK ORDER NON-CONFORMANCE / UPDATE

QA Closed: Date: Work Order update only ☐

Work Order: _____

Part No. _____

NCR No.

**DISPOSITION**

| | |
|---|---|
| Rework | ☐ |
| Scrap | ☐ |
| Use-as-is | ☐ |
| Suspected Unapproved | ☐ |

**AGAINST DEPARTMENT/PROCESS**

| | | | | | | | |
|---|---|---|---|---|---|---|---|
| Skid-tube | ☐ | Cross tube | ☐ | Water Jet | ☐ | Engineering | ☐ |
| Machining | ☐ | Small Fab | ☐ | Prod. Eng. Coor. | ☐ | Quality | ☐ |
| Thermoforming | ☐ | Finishing | ☐ | Rec/Store/Packaging | ☐ | Other | ☐ |
| Large Fab | ☐ | Composite | ☐ | Supplier | ☐ | | |

| Date : | Step #: | QTY Effective : | MRB (QSI042) Approval |
|---|---|---|---|
| | | | |

| Description Work Order Deviation | Disposition | Completed By |
|---|---|---|
| | | |
| | | Lead hand / Supervisor Approval Verification |
| | | QC / QA Coordinator Approval |

**Root Cause**

| | | | |
|---|---|---|---|
| Environment | ☐ | ☐ | No Re-verfication |
| Design | ☐ | ☐ | Operator |
| Doc/Data | ☐ | ☐ | Offset/Setup |
| Equip/Tooling | ☐ | ☐ | Supplier |
| Handling/Pre | ☐ | ☐ | Training |
| Material | ☐ | ☐ | Use for Testing |
| Internal Transport | ☐ | ☐ | Poor Information |
| Tribal Knowledge | ☐ | ☐ | Rushing |
| LOA | ☐ | ☐ | Product Improvement |
| Substation | ☐ | ☐ | Process Improvement |
| Past Expiry Date | ☐ | ☐ | Manufacturing Process |
| Misidentified | ☐ | ☐ | Past Due |

**FAULT CATEGORY**

| | | | |
|---|---|---|---|
| ☐ Pressure/Forced | ☐ Temperature/Cure | ☐ Power Loss/Surge | ☐ Positioned Wrong |
| ☐ Bending | ☐ Set-up | ☐ Folio/Program | ☐ Outside Dimensions |
| ☐ Centre Not Concentric | ☐ BOM/Route | ☐ Grain | ☐ Over/Under tolerance |
| ☐ Cracks | ☐ Broken/Damage/Defect | ☐ Weld | ☐ Part Incorrect |
| ☐ Crimp/Kink/Ripple/Wave | ☐ Inspection Incomplete/Unqualified | ☐ Wrong Stock Pulled | ☐ Part Lost/Missing |
| ☐ Cuffs | ☐ Contamination | ☐ Out of Sequence | ☐ Part Moved |
| ☐ Crushing | ☐ Countersink | ☐ Off-set | ☐ Drawing |
| ☐ Heat Treat | ☐ Cut Too Short | ☐ Mislabeled | ☐ Finish |
| ☐ Wave/Twist in Tube | ☐ Instructions Incomplete/Unclear | ☐ Fit/Function | ☐ Misread |
| ☐ Marks/Chatter | ☐ Drill Holes | ☐ Misaligned/off center | ☐ Turning Sequence |

☐ OTHER :

DART AEROSPACE

APICAL INDUSTRIES, INC.
dba DART AEROSPACE

| | | | | |
|---|---|---|---|---|
| ENGINEERING CHANGE NOTICE NO. 05304 | | | | SHEET 1 OF 1 |
| DWG NO. 646.4000 | REV: C | PREPARED BY J. BECKER | DATE: 02/04/16 | EFFECT ON DWG ☐ INC. ☒ UNINC. |
| DWG TITLE: AS350 CABLE CUTTERS KIT | | | | |
| APPROVED BY: ENGR | MFG | QC | EFF. NEXT ORDER | |

TRANSACTION CODES (TC):
A-ADD C-CREATE
R-REVISE D-DELETE

REASON: REVISED F/N 12.

ECR: N/A

ACTION ITEM:
1. N/A

SHOP COPY
RETURN TO
ENGINEERING
UNCONTROLLED COPY
SUBJECT TO AMENDMENT
WITHOUT NOTICE
WORK ORDER
NO. 157754

MAR 07 2017

**SHEET 1, BOM IS:**

| F/N | TC | PART NUMBER | QTY 4006 | QTY 4005 | DESCRIPTION | MATERIAL | SPECIFICATION |
|---|---|---|---|---|---|---|---|
| 12 | R | 601.1624 | 8 | 16 | LOCKNUT | MS21042L3 | |

DOCUMENTS EFFECTED: ☐ PATTERN ☐ MDL ☐ INSTALL INSTRUCTIONS ☐ ICA ☐ FMS ☒ BOM

CHANGE CATEGORY ☐ MAJOR ☒ MINOR

DER REVIEW REQUIRED ☐ YES ☒ NO

THE INFORMATION CONTAINED IN THIS DRAWING IS THE SOLE PROPERTY OF APICAL INDUSTRIES DBA DART AEROSPACE. ANY REPRODUCTION IN PART OR WHOLE WITHOUT THE EXPLICIT WRITTEN PERMISSION OF APICAL INDUSTRIES DBA DART AEROSPACE IS PROHIBITED.

NOTES:

1. AFTER INSTALLATION, APPLY F/N 54 A/R TO FILL GAPS AND FILLET EDGES.
2. INSTALL F/N 14 WITH F/N 52 & 53.
3. 3M VHB ADHESIVE TAPE .025" THICK X .50" WIDE
   VENDOR: MCMASTER-CARR P/N 75935A651.
4. 3M TAPE PRIMER 94, APPLY TO BOTH SURFACES A/R BEFORE TAPE.
   VENDOR: R.S. HUGHES P/N 021200-24216.
5. REUSE FASTENERS FROM F/N 1.
6. USE WASHERS A/R AS SHIMS TO OBTAIN BEST FITMENT.
7. AT CUSTOMERS OPTION, INSTALL F/N 65 BY MATCH DRILLING ON TO F/N 1.
8. INSTALL SHIM IF OEM PROVISIONS ARE INSTALLED ON AIRCRAFT. REMOVE SHIM LAYERS TO ACHIEVE CORRECT SIZE. MATCH DRILL HOLES. USE F/N 78 SCREW IN PLACE OF F/N 17 SCREW.
9. NEWER INSTALLATIONS ON AIRCRAFT WITH UPDATED CANOPY MAY REQUIRE DIFFERENT LENGTH SCREWS. USE F/N 62 TO REPLACE F/N 44 & F/N 26 IN PLACE OF F/N 41 WHEN NECESSARY.

**UNINCORPORATED ECN(s)**

05304

| REVISIONS | | | |
|---|---|---|---|
| REV. | DESCRIPTION | DATE | APPROVED |
| A | INCORPORATED ECNS 02199, 02261, 02719 & 02765 | 02/08/2013 | P. BRAVO |
| B | INCORPORATED ECN 03046, 03579 & 04731 | 11/04/2014 | P. BRAVO |
| C | INCORPORATED ECN 05098 | 09/09/2015 | P. BRAVO |

| .4006 | .4005 | .4004 | .4003 | .4002 | .4001 | FIND # | PART # | DESCRIPTION | MATL | SPEC. |
|---|---|---|---|---|---|---|---|---|---|---|
| | 5 | | 5 | | 5 | 78 | 601.3875 | SCREW | MS24694S54 | |
| | 1 | | 1 | | 1 | 77 | 646.9410 | SHIM | 8 | |
| | | | 4 | | 4 | 76 | 601.2764 | WASHER | NAS1149FN832P | |
| | | | 2 | | 2 | 75 | 601.2973 | LOCKNUT | MS21049-08 | |
| | | | 2 | | 2 | 74 | 601.2988 | SCREW | MS27039-0813 | |
| | | | 2 | | 2 | 73 | 601.2943 | LOCKNUT | MS21042-3 | |
| | | | 2 | | 2 | 72 | 601.3128 | NUT | AN316C4R | |
| | | | 2 | | 2 | 71 | 601.3209 | LOCKNUT | MS21042L4 | |
| | | | 4 | | 4 | 70 | 601.2638 | WASHER | NAS1149FD432P | |
| | | | 2 | | 2 | 69 | 601.2669 | BOLT | AN4C7A | |
| | | | 2 | | 2 | 68 | 601.3119 | CLEVIS | AN665-34R | |
| | | | 2 | | 2 | 67 | 601.3121 | EYE BOLT | AN44-5A | |
| | | | 2 | | 2 | 66 | 650.9201 | EYE BRACKET ASSY | | |
| | | REF | REF | | REF | 65 | 647.5701 | GPS MOUNT KIT | 2 | |
| | | | | | 2 | 64 | 601.3151 | WASHER | NAS1149FD363P | |
| | | | | 2 | | 63 | 601.2911 | SCREW | MS24694S53 | |
| | | | 24 | | 24 | 62 | 601.2637 | SCREW | MS27039-1-16 | |
| | 2 | | 2 | | 2 | 61 | 601.2763 | BOLT | AN3-12A | |
| | | | 1 | | 1 | 60 | 646.3913 | SHIM | | |
| | | | 4 | | 4 | 59 | 646.3912 | SHIM | | |
| | | | 1 | | 1 | 58 | 646.3911 | SHIM | | |
| | | | 4 | | 4 | 57 | 646.3910 | SHIM | | |
| | | | 5 | | 5 | 56 | 600.1013 | PRIMER | | |
| | | | B FT | | B FT | 55 | 600.0129 | VHB TAPE | | |
| | | | 1 | 1 | 1 | 54 | 600.1012 | SEALANT | PR-1425 CLASS B | |
| | | | 1 | | 1 | 53 | 600.0991 | MAGNOBOND 639B PART B | 4 | |
| | | | 1 | | 1 | 52 | 600.0990 | MAGNOBOND 639B PART A | 4 | |
| | 6 | | 10 | | 10 | 51 | 601.2826 | BOLT | AN3-11A | |
| | | | | 2 | | 50 | 646.3814 | WIPER BRACKET | | |
| | | | | 2 | | 49 | 601.2910 | SCREW | MS27039-1-18 | |
| | | 2 | | | 2 | 48 | 601.1365 | SCREW | MS27039-1-10 | |
| | | 2 | | | 2 | 47 | 646.3719 | DOUBLER | | |
| | | | 2 | | 2 | 46 | 646.3718 | CUSTOM WASHER | | |
| | | 1 | | | 1 | 45 | 646.3717 | DOUBLER | | |
| | | | 22 | 2 | 22 | 44 | 601.1948 | SCREW | MS27039-1-19 | |
| | | | 2 | | 2 | 43 | 601.1952 | SCREW | MS27039-1-20 | |
| | | | 4 | | 4 | 42 | 601.1956 | SCREW | MS27039-1-21 | |
| | | | 2 | | 2 | 41 | 601.2829 | SCREW | MS24694S54 | |
| | | | 2 | | 2 | 40 | 601.2831 | RIVET | MS20426AD5-7 | |
| | | | 1 | | 1 | 39 | 646.3716 | GAUGE BRACKET | | |
| | | | 6 | | 6 | 38 | 601.1953 | SCREW | MS27039-1-12 | |
| | | 2 | | | 2 | 37 | 646.3715 | STRUT DOUBLER | | |
| | 2 | | 2 | | 2 | 36 | 601.2824 | BOLT | AN3-5A | |
| 12 | | 36 | | | 36 | 35 | 601.2277 | RIVET | CR3246S-8-02 | |
| 6 | | 18 | | | 18 | 34 | 600.0795 | NUTPLATE | MS21047-3 | |
| 3 | | 3 | | | 3 | 33 | 601.2565 | RIVET | MS20470AD5-7 | |
| 1 | | 1 | | | 1 | 32 | 646.3813 | STRUT BRACKET | | |
| 4 | | 4 | | | 4 | 31 | 601.2822 | BOLT | AN3-3A | |
| 2 | | 2 | | | 2 | 30 | 646.3812 | GUSSET BRACKET | | |
| 8 | | 8 | | | 8 | 29 | 601.2564 | RIVET | MS20470AD5-6 | |
| 1 | | 1 | | | 1 | 28 | 646.3714 | GUSSET | | |
| | 1 | | 1 | | 1 | 27 | 646.3610 | FILLER | | |
| | 3 | | 3 | | 3 | 26 | 601.2830 | SCREW | MS24694S55 | |
| | 2 | | 2 | | 2 | 25 | 601.2825 | BOLT | AN3-6A | |
| | 1 | | 1 | | 1 | 24 | 646.3811 | RADIUS BLOCK | | |
| | 1 | | 1 | | 1 | 23 | 646.3712 | CLIP | | |
| | 1 | | 1 | | 1 | 22 | 646.3711 | CLIP | | |
| 8 | | 8 | | | 8 | 21 | 601.2832 | RIVET | MS20470AD5-5.5 | |
| 14 | | 14 | | | 14 | 20 | 601.2020 | RIVET | CW3213-5-3 | |
| 4 | 6 | 4 | 6 | | 10 | 19 | 601.2823 | BOLT | AN3-4A | |
| | 1 | | 1 | | 1 | 18 | 601.2827 | BOLT | AN3-13A | |
| | 5 | | 5 | | 5 | 17 | 601.2912 | SCREW | MS24694S61 | |
| 1 | | 1 | | | 1 | 16 | 646.3713 | GUSSET | | |
| 1 | | 1 | | | 1 | 15 | 646.3210 | SUPPORT | | |
| | | 1 | | | 1 | 14 | 646.3710 | DOUBLER | | |
| | 1 | | 1 | | 1 | 13 | 646.3110 | CHANNEL | | |
| 14 | 10 | 8 | 53 | 6 | 61 | 12 | 601.1624 | LOCKNUT | MS21042L3 | |
| 16 | 32 | 18 | 120 | 16 | 144 | 11 | 601.1607 | WASHER | NAS1149FD332P | |
| | | | | 1 | | 10 | 646.3410 | LH WIPER DEFLECTOR | | |
| | | | | 1 | | 9 | 646.3411 | RH WIPER DEFLECTOR | | |
| | | | 2 | | 2 | 8 | 647.7703 | STRUT ASSY | | |
| | | | 2 | | 2 | 7 | 647.0112 | STRUT BRACKET | | |
| | 1 | | 1 | | 1 | 6 | 646.3511 | STRUT | | |
| | 1 | | 1 | | 1 | 5 | 646.3510 | STRUT | | |
| 2 | | 2 | | | 2 | 4 | 646.3810 | BRACKET | | |
| | | | 1 | | 1 | 3 | 646.2910 | DEFLECTOR | | |
| | 1 | | 1 | | 1 | 2 | 646.3001 | LOWER CUTTER ASSY | | |
| | | | 1 | | 1 | 1 | 646.3301 | UPPER CUTTER ASSY | | |
| X | | | | | | | 646.4006 | LOWER CUTTER FIXED PROVISIONS | | |
| | X | | | | | | 646.4005 | LOWER CUTTER REMOVABLE PROVISIONS | | |
| | | X | | | | | 646.4004 | FIXED PROVISIONS KIT | | |
| | | | X | | | | 646.4003 | CABLE CUTTERS W/ WIPER FIXED PROVISIONS | | |
| | | | | X | | | 646.4002 | AS350 WIPER DEFLECTOR KIT | | |
| | | | | | X | | 646.4001 | AS350 CABLE CUTTERS KIT | | |

QTY NEXT ASSY [S]

PARTS LIST

ORIGINAL DATE 09/24/15
DRAWN BY CHRISTER
S. KIPP P. BRAVO
DRAWING APPROVAL
P. BRAVO 09/29/15
CONTRACT No.

UNLESS OTHERWISE SPECIFIED DIMENSIONS ARE IN INCHES
TOLERANCES ARE:
2 PLACE DECIMALS ±.010
3 PLACE DECIMALS ±.005
ANGLES ± 2°

NEXT ASSY
B

DART AEROSPACE
APICAL INDUSTRIES, INC. dba DART AEROSPACE
3030 ENTERPRISE CT. SUITE A
VISTA, CA. 92081
(760)-724-5300

AS350 CABLE CUTTERS KIT

SIZE B | CAGE CODE 07M26 | DWG. NO. 646.4000 | REV C

SCALE NONE | SHEET 1 OF 5

THE INFORMATION CONTAINED IN THIS DRAWING IS THE SOLE PROPERTY OF APICAL INDUSTRIES DBA DART AEROSPACE. ANY REPRODUCTION IN PART OR WHOLE WITHOUT THE EXPLICIT WRITTEN PERMISSION OF APICAL INDUSTRIES DBA DART AEROSPACE IS PROHIBITED.

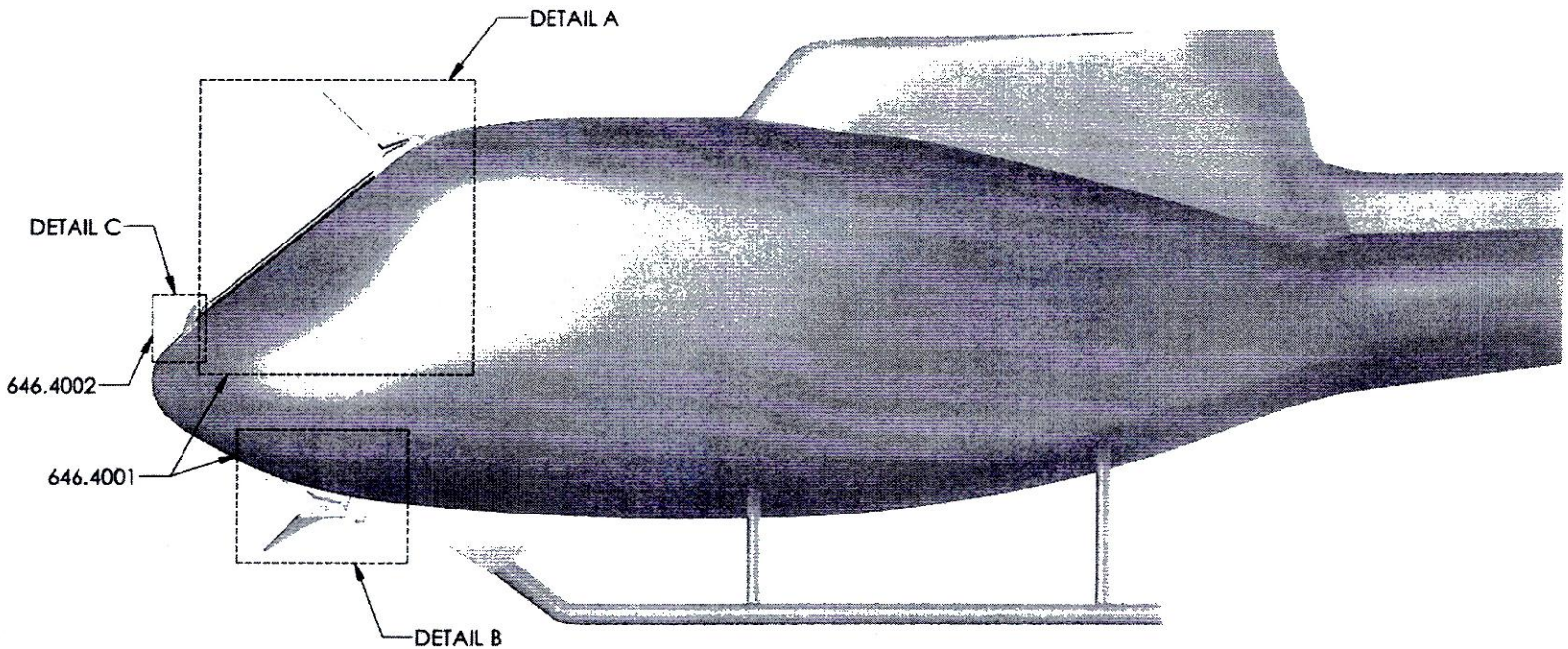


| | |
|---|---|
| ORIGINAL DATE (MC/DA/YR) 08-27-08 | DART AEROSPACE 3030 ENTERPRISE CT., SUITE A VISTA, CA. 92081 (760)-724-5300 |
| DRAWN BY S. Huff | CHECKED P. BRAVO |
| DRAWING APPROVAL P. BRAVO 08-27-08 | APICAL INDUSTRIES, INC. dba DART AEROSPACE |
| CONTRACT No. | AS350 CABLE CUTTERS KIT |
| UNLESS OTHERWISE SPECIFIED DIMENSIONS ARE IN INCHES TOLERANCES ARE: 2 PLACE DECIMALS ±.010 3 PLACE DECIMALS ±.005 ANGLES ± .5° | SIZE B \| CAGE CODE 07MZ6 \| DWG. NO. 646.4000 \| REV C |
| | SCALE NONE \| SHEET 2 OF 5 |

THE INFORMATION CONTAINED IN THIS DRAWING IS THE SOLE PROPERTY OF APICAL INDUSTRIES DBA DART AEROSPACE. ANY REPRODUCTION IN PART OR WHOLE WITHOUT THE WRITTEN PERMISSION OF APICAL INDUSTRIES DBA DART AEROSPACE IS PROHIBITED.

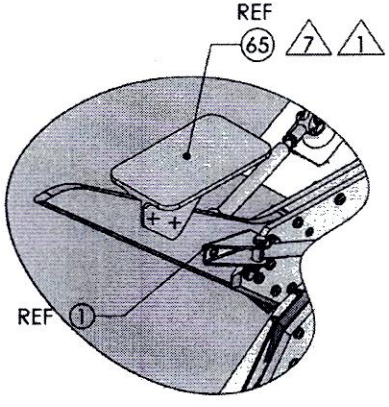


DETAIL D
TYPICAL GPS MOUNT KIT INSTALLATION

DETAIL D

51 2 PL
11 4 PL
73 2 PL
62 2PL
11 2PL
69 2 PL
71 2 PL
70 4 PL
66 2 PL
67 2 PL
5
8 2 PL
38 6PL
11 6PL
14 1 2
2 PL 64
48 2PL
11 2PL
2 PL 7
2 PL 74
4 PL 75
4 PL 76
1 1
2 PL 51
4PL 11
2 PL 12
2 PL 68
2 PL 72
47 2PL
35 4PL
34 2PL
37 2PL
35 12PL
34 6PL
42 4PL
11 8PL
12 4PL
57 A/R
58 A/R
45
35 4PL
34 2PL
43 2PL
11 4PL
12 2PL
1 3
3 55
4 56
44 OR 62 22 PL 9
11 44PL
12 22PL
2PL 40
9 2 PL 26 OR 41
2 PL 12
2 PL 46
A/R 59
A/R 60
39

DETAIL A
SHOWN ISOMETRICALLY

| | | | |
|---|---|---|---|
| ORIGINAL DATE (MO-DA-YR) | 08-27-08 | DART AEROSPACE | 3030 ENTERPRISE CT., SUITE A VISTA, CA. 92081 (760)-724-5300 |
| DRAWN BY | CHECKED | APICAL INDUSTRIES, INC dba DART AEROSPACE | |
| S. HUFF | F. BRAVO | | |
| DRAWING APPROVAL | | | |
| F. BRAVO | 08-27-08 | | |
| CONTRACT No. | | AS350 CABLE CUTTERS KIT | |
| UNLESS OTHERWISE SPECIFIED DIMENSIONS ARE IN INCHES TOLERANCES ARE 2 PLACE DECIMALS ±.01 3 PLACE DECIMALS ±.005 ANGLES ± .5° | | SIZE B / CAGE CODE 07M26 / DWG. NO. 646.4000 / REV C | |
| | | SCALE NONE | SHEET 3 OF 5 |

THE INFORMATION CONTAINED IN THIS DRAWING IS THE SOLE PROPERTY OF APICAL INDUSTRIES DBA DART AEROSPACE. ANY REPRODUCTION IN PART OR WHOLE WITHOUT THE EXPLICIT WRITTEN PERMISSION OF APICAL INDUSTRIES DBA DART AEROSPACE IS PROHIBITED.

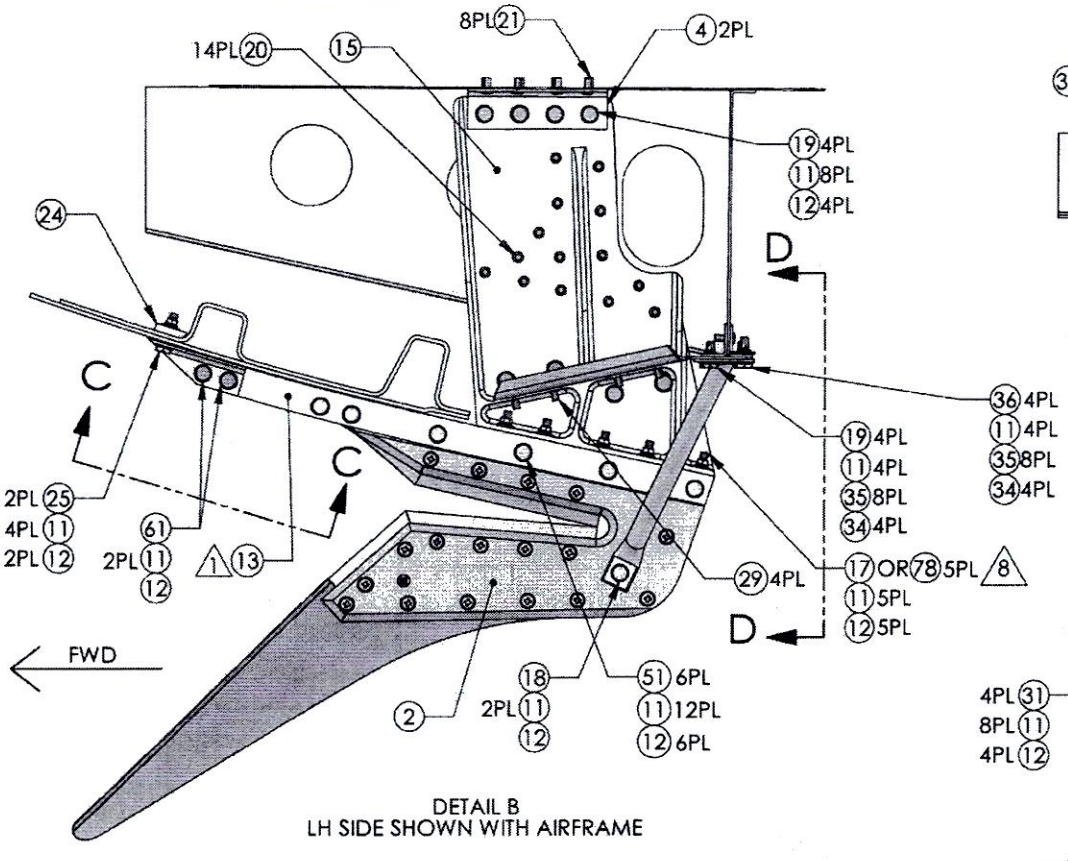


DETAIL B
LH SIDE SHOWN WITH AIRFRAME

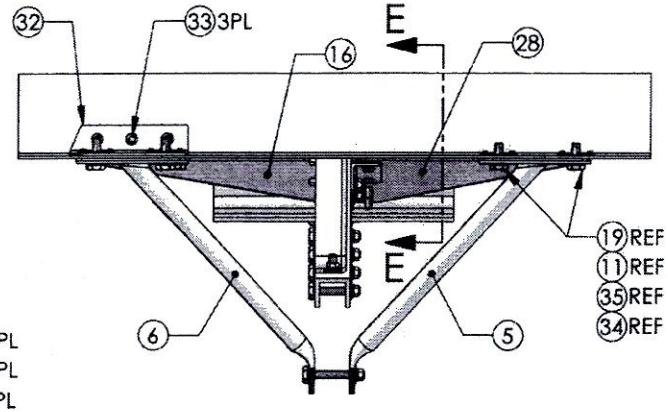


SECTION D-D
CUTTER HIDDEN FOR CLARITY

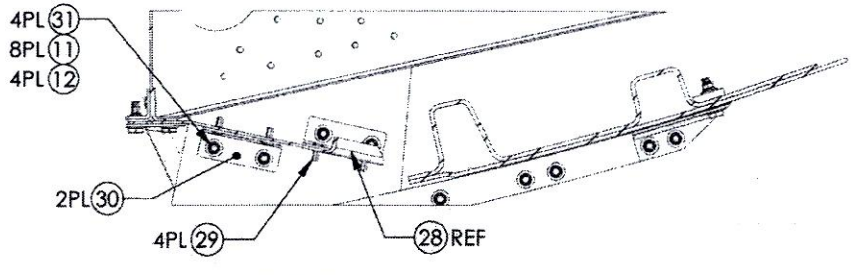


SECTION E-E

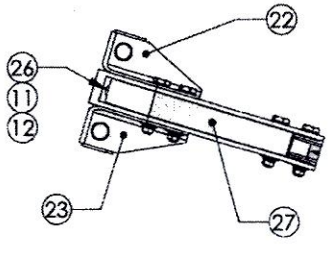


SECTION C-C

| | | | |
|---|---|---|---|
| ORIGINAL DATE (MO-DA-YR) 03-27-08 | | DART AEROSPACE 3030 ENTERPRISE CT., SUITE A VISTA, CA. 92081 (760)-724-5300 | |
| DRAWN BY S. PUFF | CHECKED P. BRAVO | | |
| DRAWING APPROVAL P. BRAVO 08-27-08 | | | |
| CONTRACT NO | | AS350 CABLE CUTTERS KIT | |
| UNLESS OTHERWISE SPECIFIED DIMENSIONS ARE IN INCHES TOLERANCES ARE: 2 PLACE DECIMALS ±.010 3 PLACE DECIMALS ±.005 ANGLES ±.5° | | SIZE B | CAGE CODE 07MZ6 | DWG. NO. 646.4000 | REV C |
| | | SCALE NONE | | SHEET 4 OF 5 | |

THE INFORMATION CONTAINED IN THIS DRAWING IS THE SOLE PROPERTY OF APICAL INDUSTRIES DBA DART AEROSPACE. ANY REPRODUCTION IN PART OR WHOLE WITHOUT THE EXPLICIT WRITTEN PERMISSION OF APICAL INDUSTRIES DBA DART AEROSPACE IS PROHIBITED.

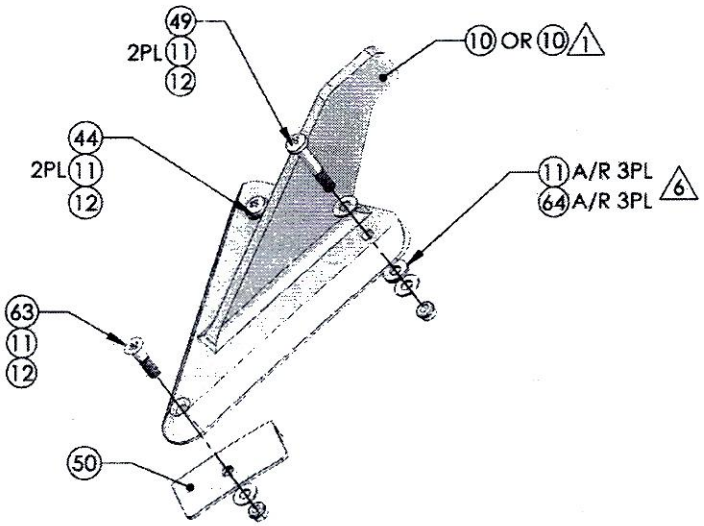


DETAIL C
LH SHOWN EXPLODED
RH OPPOSITE

| | |
|---|---|
| ORIGINAL DATE (MO-DA-YR) 08-27-08 | DART AEROSPACE APICAL INDUSTRIES, INC dba DART AEROSPACE |
| DRAWN BY S. HUFF | CHECKER P. BRAVO |
| DRAWING APPROVAL P. BRAVO 08-27-08 | 3030 ENTERPRISE CT., SUITE A VISTA, CA. 92081 (760)-724-5300 |
| CONTRACT No. | AS350 CABLE CUTTERS KIT |
| UNLESS OTHERWISE SPECIFIED DIMENSIONS ARE IN INCHES TOLERANCES ARE: 2 PLACE DECIMALS ±0.10 3 PLACE DECIMALS ±0.05 ANGLES ± 5° | SIZE B \| CAGE CODE 07M26 \| DWG NO 646.4000 \| REV. C |
| | SCALE NONE \| SHEET 5 OF 5 |

REFERENCE ONLY

THE INFORMATION CONTAINED IN THIS DRAWING IS THE SOLE PROPERTY OF APICAL INDUSTRIES DBA DART AEROSPACE. ANY REPRODUCTION IN PART OR WHOLE WITHOUT THE EXPLICIT WRITTEN PERMISSION OF APICAL INDUSTRIES DBA DART AEROSPACE IS PROHIBITED.

NOTES:

1. AFTER INSTALLATION, APPLY F/N 54 A/R TO FILL GAPS AND FILLET EDGES.
2. INSTALL F/N 14 WITH F/N 52 & 53.
3. 3M VHB ADHESIVE TAPE .025" THICK X .50" WIDE
   VENDOR: MCMASTER-CARR P/N 75935A651.
4. 3M TAPE PRIMER 94, APPLY TO BOTH SURFACES A/R BEFORE TAPE.
   VENDOR: R.S. HUGHES P/N 021200-24216.
5. REUSE FASTENERS FROM F/N 1.
6. USE WASHERS A/R AS SHIMS TO OBTAIN BEST FITMENT.
7. AT CUSTOMERS OPTION, INSTALL F/N 65 BY MATCH DRILLING ON TO F/N 1.
8. INSTALL SHIM IF OEM PROVISIONS ARE INSTALLED ON AIRCRAFT. REMOVE SHIM LAYERS TO ACHIEVE CORRECT SIZE. MATCH DRILL HOLES. USE F/N 78 SCREW IN PLACE OF F/N 17 SCREW.
9. NEWER INSTALLATIONS ON AIRCRAFT WITH UPDATED CANOPY MAY REQUIRE DIFFERENT LENGTH SCREWS. USE F/N 62 TO REPLACE F/N 44 & F/N 26 IN PLACE OF F/N 41 WHEN NECESSARY.

**UNINCORPORATED ECN(s)**

05304

| REVISIONS | | | |
|---|---|---|---|
| REV. | DESCRIPTION | DATE | APPROVED |
| A | INCORPORATED ECNS 02799, 02851, 02719 & 02765 | 02/08/2010 | P. BRAVO |
| B | INCORPORATED ECN 03046, 03079 & 04721 | 11/04/2014 | P. BRAVO |
| C | INCORPORATED ECN 05058 | 09/05/2015 | P. BRAVO |

| .4006 | .4005 | .4004 | .4003 | .4002 | .4001 | FIND # | PART # | DESCRIPTION | MAT'L | SPEC. |
|---|---|---|---|---|---|---|---|---|---|---|
| | 5 | | 5 | | 5 | 78 | 601.3875 | SCREW | MS24694S54 | |
| | 1 | | 1 | | 1 | 77 | 646.9410 | SHIM | ⚠ | |
| | | | 4 | | 4 | 76 | 601.2764 | WASHER | NAS1149F0832P | |
| | | | 2 | | 2 | 75 | 601.2973 | LOCKNUT | MS21042-08 | |
| | | | 2 | | 2 | 74 | 601.2988 | SCREW | MS27039-0813 | |
| | | | 2 | | 2 | 73 | 601.2943 | LOCKNUT | MS21042-3 | |
| | | | 2 | | 2 | 72 | 601.3128 | NUT | AN316C4R | |
| | | | 2 | | 2 | 71 | 601.3209 | LOCKNUT | MS21042L4 | |
| | | | 4 | | 4 | 70 | 601.2638 | WASHER | NAS1149F0432P | |
| | | | 2 | | 2 | 69 | 601.2669 | BOLT | AN4C7A | |
| | | | 2 | | 2 | 68 | 601.3119 | CLEVIS | AN665-348 | |
| | | | 2 | | 2 | 67 | 601.3121 | EYE BOLT | AN44-5A | |
| | | | 2 | | 2 | 66 | 650.9201 | EYE BRACKET ASSY | | |
| | | REF | REF | | REF | 65 | 647.5701 | GPS MOUNT KIT | ⚠ | |
| | | | | | 2 | 64 | 601.3151 | WASHER | NAS1149F0363P | |
| | | | | 2 | | 63 | 601.2911 | SCREW | MS27039-1-16 | |
| | | | 24 | | 24 | 62 | 601.2637 | SCREW | MS27039-1-16 | |
| | 2 | | 2 | | 2 | 61 | 601.2763 | BOLT | AN3-12A | |
| | | | 1 | | 1 | 60 | 646.3913 | SHIM | | |
| | | | 4 | | 4 | 59 | 646.3912 | SHIM | | |
| | | | 1 | | 1 | 58 | 646.3911 | SHIM | | |
| | | | 4 | | 4 | 57 | 646.3910 | SHIM | | |
| | | | 5 | | 5 | 56 | 600.1013 | PRIMER | | |
| | | | 8 FT | | 8 FT | 55 | 600.0129 | VHB TAPE | | |
| | | | 1 | 1 | 1 | 54 | 600.1012 | SEALANT | PR-1425 CLASS B | |
| | | | 1 | | 1 | 53 | 600.0991 | MAGNOBOND 6398 PART B | ⚠ | |
| | | | 1 | | 1 | 52 | 600.0990 | MAGNOBOND 6398 PART A | ⚠ | |
| | 6 | | 10 | | 10 | 51 | 601.2826 | BOLT | AN3-11A | |
| | | | | 2 | | 50 | 646.3814 | WIPER BRACKET | | |
| | | | | 2 | | 49 | 601.2910 | SCREW | MS27039-1-18 | |
| | | 2 | | | 2 | 48 | 601.1365 | SCREW | MS27039-1-10 | |
| | | 2 | | | 2 | 47 | 646.3719 | DOUBLER | | |
| | | | 2 | | 2 | 46 | 646.3718 | CUSTOM WASHER | | |
| | | 1 | | | 1 | 45 | 646.3717 | DOUBLER | | |
| | | | 22 | 2 | 22 | 44 | 601.1948 | SCREW | MS27039-1-19 | |
| | | | 2 | | 2 | 43 | 601.1952 | SCREW | MS27039-1-20 | |
| | | | 4 | | 4 | 42 | 601.1956 | SCREW | MS27039-1-21 | |
| | | | | | 2 | 41 | 601.2829 | SCREW | MS24694S54 | |
| | | | | | 2 | 40 | 601.2831 | RIVET | MS20426AD5-7 | |
| | | | | | 1 | 39 | 646.3716 | GAUGE BRACKET | | |
| | | | | | 6 | 38 | 601.1953 | SCREW | MS27039-1-12 | |
| | | | 2 | | 2 | 37 | 646.3715 | STRUT DOUBLER | | |
| | 2 | | | | 2 | 36 | 601.2824 | BOLT | AN3-5A | |
| 12 | | 36 | | | 36 | 35 | 601.2277 | RIVET | CCR2685-02 | |
| 6 | | 18 | | | 18 | 34 | 600.0795 | NUTPLATE | MS21047-3 | |
| 3 | | 3 | | | 3 | 33 | 601.2565 | RIVET | MS20470AD5-7 | |
| 1 | | 1 | | | 1 | 32 | 646.3813 | STRUT BRACKET | | |
| 4 | | 4 | | | 4 | 31 | 601.2822 | BOLT | AN3-3A | |
| 2 | | 2 | | | 2 | 30 | 646.3812 | GUSSET BRACKET | | |
| 8 | | 8 | | | 8 | 29 | 601.2564 | RIVET | MS20470AD5-6 | |
| 1 | | 1 | | | 1 | 28 | 646.3714 | GUSSET | | |
| | 1 | | 1 | | 1 | 27 | 646.3610 | FILLER | | |
| | 3 | | 3 | | 3 | 26 | 601.2630 | SCREW | MS24694S55 | |
| | 2 | | 2 | | 2 | 25 | 601.2825 | BOLT | AN3-8A | |
| | 1 | | 1 | | 1 | 24 | 646.3811 | RADIUS BLOCK | | |
| | 1 | | 1 | | 1 | 23 | 646.3712 | CLIP | | |
| | 1 | | 1 | | 1 | 22 | 646.3711 | CLIP | | |
| 8 | | 8 | | | 8 | 21 | 601.2832 | RIVET | MS20426AD5-5 | |
| 14 | | 14 | | | 14 | 20 | 601.2020 | RIVET | CR3213-5-5 | |
| 4 | 6 | 4 | 6 | | 10 | 19 | 601.2623 | BOLT | AN3-4A | |
| | 1 | | 1 | | 1 | 18 | 601.2627 | BOLT | AN3-13A | |
| | 5 | | 5 | | 5 | 17 | 601.2912 | SCREW | MS24694S51 | |
| 1 | | 1 | | | 1 | 16 | 646.3713 | GUSSET | | |
| 1 | | 1 | | | 1 | 15 | 646.3210 | SUPPORT | | |
| | | 1 | | | 1 | 14 | 646.3710 | DOUBLER | | |
| | 1 | | 1 | | 1 | 13 | 646.3110 | CHANNEL | | |
| 14 | 10 | 8 | 53 | 6 | 61 | 12 | 601.1624 | LOCKNUT | MS21042L3 | |
| 16 | 32 | 18 | 120 | 16 | 144 | 11 | 601.1607 | WASHER | NAS1149F0332P | |
| | | | | 1 | | 10 | 646.3410 | LH WIPER DEFLECTOR | | |
| | | | | 1 | | 9 | 646.3411 | RH WIPER DEFLECTOR | | |
| | | | 2 | | 2 | 8 | 647.7703 | STRUT ASSY | | |
| | | | 2 | | 2 | 7 | 647.0112 | STRUT BRACKET | | |
| | 1 | | 1 | | 1 | 6 | 646.3511 | STRUT | | |
| | 1 | | 1 | | 1 | 5 | 646.3510 | STRUT | | |
| 2 | | 2 | | | 2 | 4 | 646.3810 | BRACKET | | |
| | | | 1 | | 1 | 3 | 646.2910 | DEFLECTOR | | |
| | 1 | | 1 | | 1 | 2 | 646.3001 | LOWER CUTTER ASSY | | |
| | | | 1 | | 1 | 1 | 646.3301 | UPPER CUTTER ASSY | | |
| X | | | | | | | 646.4006 | LOWER CUTTER FIXED PROVISIONS | | |
| | X | | | | | | 646.4005 | LOWER CUTTER REMOVABLE PROVISIONS | | |
| | | X | | | | | 646.4004 | FIXED PROVISIONS KIT | | |
| | | | X | | | | 646.4003 | CABLE CUTTERS KIT WITHOUT FIXED PROVISIONS | | |
| | | | | X | | | 646.4002 | AS350 WIPER DEFLECTOR KIT | | |
| | | | | | X | | 646.4001 | AS350 CABLE CUTTERS KIT | | |

QTY

PARTS LIST

NEXT ASSY (S)

ORIGINAL DATE (MO-DA-YR): 08-27-08
DRAWN BY: S. HUFF
CHECKED BY: P. BRAVO
DRAWING APPROVAL: P. BRAVO 08-27-08
US PATENT NO:

UNLESS OTHERWISE SPECIFIED DIMENSIONS ARE IN INCHES
TOLERANCES ARE:
2 PLACE DECIMALS ± .010
3 PLACE DECIMALS ± .005
ANGLES ± 2°

SIZE B

DART AEROSPACE
APICAL INDUSTRIES INC. dba DART AEROSPACE
3030 ENTERPRISE CT., SUITE A
VISTA, CA. 92081
(760)-724-6300

# AS350 CABLE CUTTERS KIT

| SIZE | CAGE CODE | DWG NO. | REV |
|---|---|---|---|
| B | 07MZ6 | 646.4000 | C |

SCALE: NONE SHEET 1 OF 5

# Work Order ID 157754

*Wednesday, March 08, 2017 9:50:56 AM*

*157754*



**Item ID:** 646.4001 **Accept** *N900040100* **Setup Start** *NS1*

**Revision ID:** **Stop** *NS2*

**Item Name:** AS350 Cable Cutter System

**Start Date:** 3/14/2017 **Start Qty:** 1.00 *1*

**Required Date:** 3/21/2017 **Req'd Qty:** 1.00 *1*

**Reference:** SCHEDULED

**Cust Item ID:**

**Customer:**

**Run Start** *NR1*

**Stop** *NR2*

**Approvals:** **Process Plan:** _____ **Date:** _____ **Tooling:** _____ **Date:** _____

**QC:** _____ **Date:** _____ **SPC (Y/N):** _____ **Date:** _____

| Sequence ID/ Work Center ID | Operation Description | Set Up/ Run Hours | Tool ID | Tool # | Plan Code | Accept Qty | Reject Qty | Reject Number | Insp. Stamp |
|---|---|---|---|---|---|---|---|---|---|
| **Draw Nbr** / **Revision Nbr** | | | | | | | | | |
| 646.4000 / C1 | | | | | | | | | |
| 100 | Document Control | 0.00 | | | | | DAS 21 3-89 | MAR 0 8 2017 | |
| *100* | DOCUMENT CONTROL | | | | | | | | |
| DC | **Memo** | 0.00 | | | | | | | |
| Doc.Control -USB or Paperwork | Photocopy bluefile & type labels per PPP 646.4001 | | | | | | | | |
| 110 | Pick Kit | 0.00 | | | | | | | |
| *110* | | | | | | | | | |
| Packaging | **Memo** | 0.00 | | | | | | | |
| Packaging | | | | | | | | | |
| 120 | QC4- 100% Inspect kits for completeness | 0.00 | | | | | | | |
| *120* | | | | | | | | | |
| QC | **Memo** | 0.01 | | | | | | | |
| Quality Control | | | | | | | | | |